SMA Male to Violet FAKRA Plug Cable 48 Inch Length Using ET3 8358 Coax

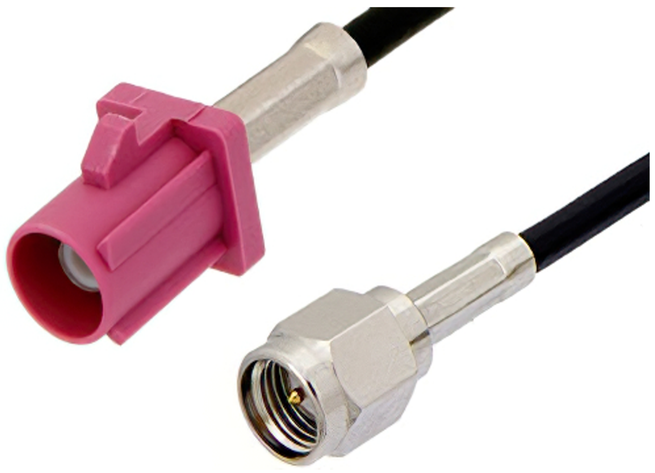

# RF Cable Assemblies Technical Data Sheet

**ET22428**

## Configuration

- Connector 1: SMA Male
- Connector 2: FAKRA Plug
- Cable Type: ET-C100-LSZH

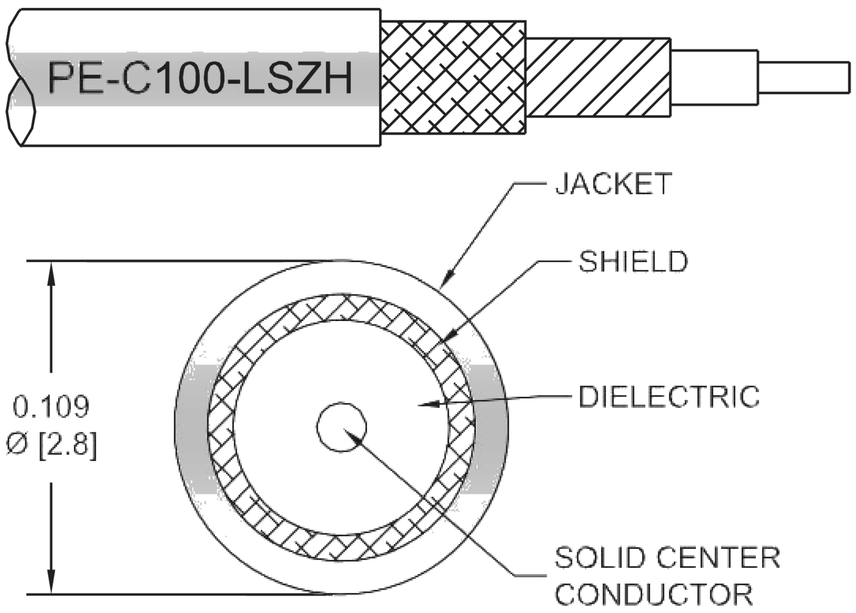


## Electrical Specifications

| Description | Minimum | Typical | Maximum | Units |
|---|---|---|---|---|
| Frequency Range | DC | | 4 | GHz |
| VSWR | | | 1.4:1 | |
| Velocity of Propagation | | 66 | | % |
| RF Shielding | 90 | | | dB |
| Capacitance | | 30.8 [101.05] | | pF/ft [pF/m] |
| Inductance | | 0.077 [0.25] | | uH/ft [uH/m] |
| Jacket Spark | | | 2,000 | Vrms |

### Specifications by Frequency

| Description | F1 | F2 | F3 | F4 | F5 | Units |
|---|---|---|---|---|---|---|
| Frequency | 0.1 | 0.25 | 0.5 | 1 | 4 | GHz |
| Insertion Loss (Typ.) | 0.48 | 0.662 | 0.865 | 1.146 | 2.157 | dB |
| VSWR (Max.) | 1.4:1 | 1.4:1 | 1.4:1 | 1.4:1 | | |
| Return Loss (Max.) | 15.56 | 15.563 | 15.563 | 15.563 | | dB |

## Mechanical Specifications

### Cable Assembly

Length* 48 in [121.92 cm]

Click the following link (or enter part number in “SEARCH” on website) to obtain additional part information including price, inventory and certifications: SMA Male to Violet FAKRA Plug Cable 48 Inch Length Using ET-C100-LSZH Coax ET22428

8th Floor, Building 1, Yongfu Science and Technology Center Industrial Park,
Nanzha District 5, Humen,523900, Dongguan, Guangdong, China.

Webstie:www.ebeestock.com Email:sales@ebeestock.com

© 2022 Ebeestock Enterprises All Rights Reserved

SMA Male to Violet FAKRA Plug Cable 48 Inch Length Using ET3 8358 Coax

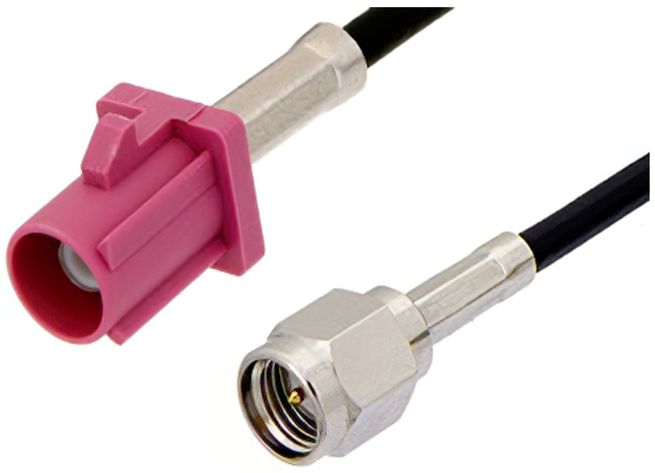

# RF Cable Assemblies Technical Data Sheet ET22428

| | |
|---|---|
| Diameter | 0.37 in [9.4 mm] |
| Weight | 0.11 lbs [49.9 g] |
| **Cable** | |
| Cable Type | ET-C100-LSZH |
| Impedance | 50 Ohms |
| Inner Conductor Type | Solid |
| Inner Conductor Material and Plating | Copper Clad Steel |
| Dielectric Type | PE |
| Number of Shields | 2 |
| Shield Layer 1 | Aluminum Tape |
| Shield Layer 2 | Tinned Copper Braid |
| Jacket Material | LSZH, Black |
| Jacket Diameter | 0.109 in [2.77 mm] |
| One Time Minimum Bend Radius | 0.25 in [6.35 mm] |
| Repeated Minimum Bend Radius | 1 in [25.4 mm] |
| Bending Moment | 0.1 lbs-ft [0.14 N-m] |
| Flat Plate Crush | 10 lbs/in [0.18 Kg/mm] |
| Tensile Strength | 15 lbs [6.8 Kg] |

**Connectors**

| Description | Connector 1 | Connector 2 |
|---|---|---|
| Type | SMA Male | FAKRA Plug |
| Specification | MIL-STD-348A | |
| Impedance | 50 Ohms | 50 Ohms |
| Configuration | Straight | Straight |
| Contact Material and Plating | Brass, Gold | Phosphor Bronze, Gold |
| Contact Plating Specification | 30µ in. Minimum | |
| Dielectric Type | PTFE | Teflon |
| Outer Conductor Material and Plating | | Brass, Nickel |
| Body Material and Plating | Brass, Nickel | Plastic |
| Body Plating Specification | 100µ in. Minimum | |
| Coupling Nut Material and Plating | Brass, Nickel | |
| Coupling Nut Plating Specification | 100µ in. Minimum | |
| Hex Size | 5/16 in | |
| Torque | 5 in-lbs [0.57 Nm] | |

Mechanical Specification Notes:
*All cable assemblies have a length tolerance of 1.5% or ± 3/8", whichever is greater.

Click the following link (or enter part number in "SEARCH" on website) to obtain additional part information including price, inventory and certifications: SMA Male to Violet FAKRA Plug Cable 48 Inch Length Using ET-C100-LSZH Coax ET22428

8th Floor, Building 1, Yongfu Science and Technology Center Industrial Park,
Nanzha District 5, Humen,523900, Dongguan, Guangdong, China.

Webstie:www.ebeestock.com Email:sales@ebeestock.com

© 2022 Ebeestock Enterprises All Rights Reserved

SMA Male to Violet FAKRA Plug Cable 48 Inch Length Using ET3 8358 Coax

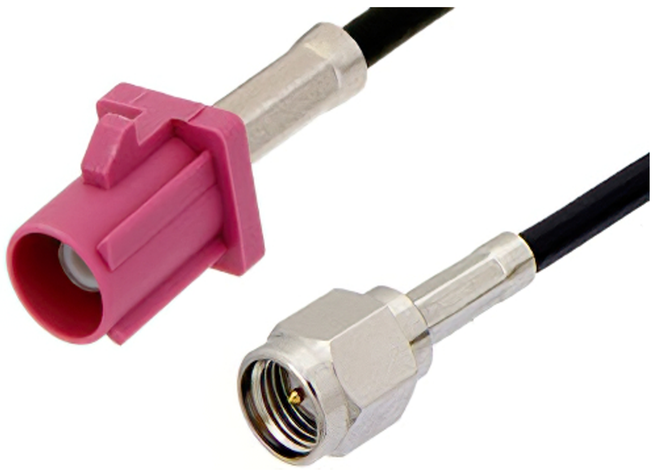

# RF Cable Assemblies Technical Data Sheet ET22428

**Compliance Certifications** (see product page for current document)

**Plotted and Other Data**

Notes:

- Values at 25°C, sea level.

**How to Order**

Part Number Configuration: **ET39342H - xx uu**

- **uu** — Unit of Measure:
  - cm = Centimeters
  - <blank> = Inches
- **xx** — Length
- **ET39342H** — Base Number

Example: ET39342H-12 = 12 inches long cable
ET39342H-100cm = 100 cm long cable

SMA Male to Violet FAKRA Plug Cable 48 Inch Length Using ET-C100-LSZH Coax from Ebeestock Enterprises has same day shipment for domestic and International orders. Our RF, microwave and millimeter wave products maintain a 99.4% availability and are part of the broadest selection in the industry.

Click the following link (or enter part number in “SEARCH” on website) to obtain additional part information including price, inventory and certifications: SMA Male to Violet FAKRA Plug Cable 48 Inch Length Using ET-C100-LSZH Coax ET22428

**URL:** https://www.ebeestock.com/sma-male-to-violet-fakra-plug-cable-12-inch-length-using-pe-c100-lszh-coax-0022425

The information contained in this document is accurate to the best of our knowledge and representative of the part described herein. It may be necessary to make modifications to the part and/or the documentation of the part, in order to implement improvements. Ebeestock reserves the right to make such changes as required. Unless otherwise stated, all specifications are nominal. Ebeestock does not make any representation or warranty regarding the suitability of the part described herein for any particular purpose, and Ebeestock does not assume any liability arising out of the use of any part or documentation.



© 2022 Ebeestock Enterprises All Rights Reserved

# ET22428 CAD Drawing

SMA Male to Violet FAKRA Plug Cable 48 Inch Length Using ET-C100-LSZH Coax

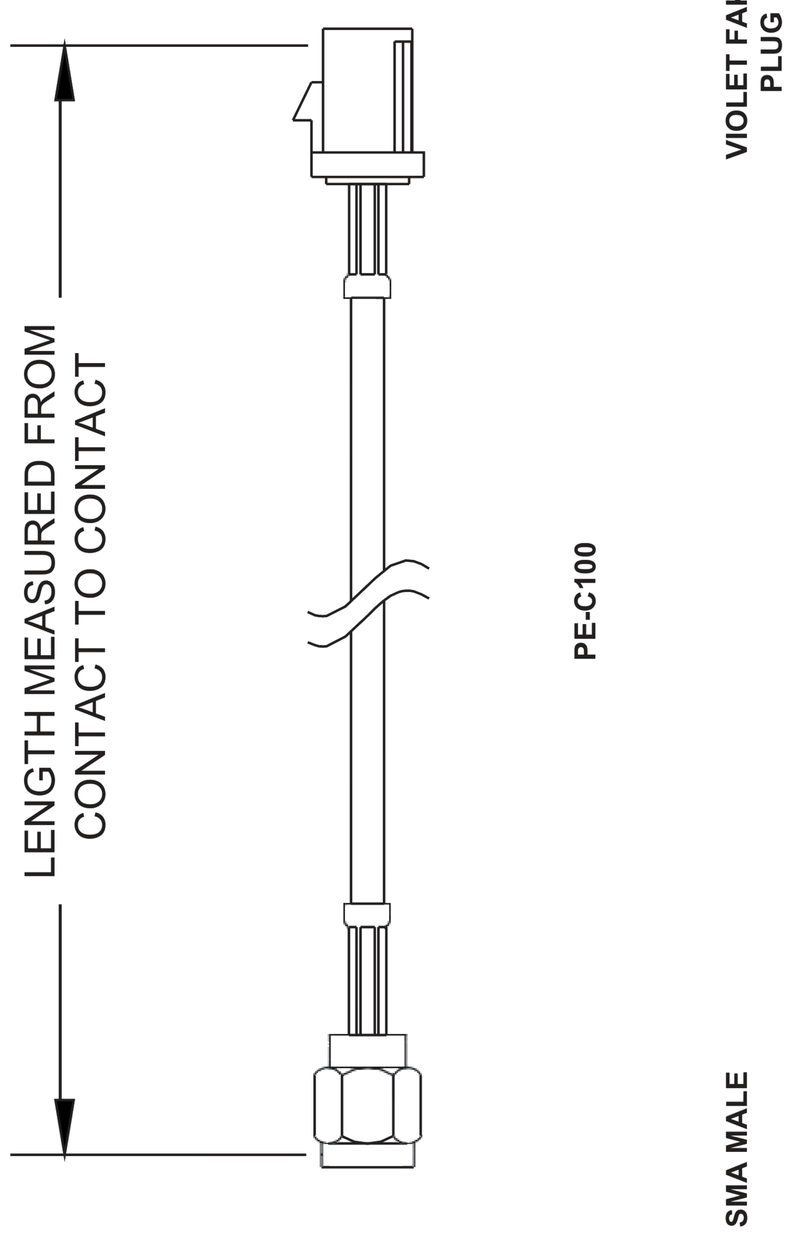


| Part # Ext. | Length In Inches | Part # Ext. | Length In Centimeters |
|---|---|---|---|
| -12 | 12" | -25CM | 25Cm |
| -24 | 24" | -50CM | 50Cm |
| -36 | 36" | -75CM | 75Cm |
| -48 | 48" | -100CM | 100Cm |
| -60 | 60" | -125CM | 125Cm |
| -xx | Custom Length | -xxCM | Custom Length |

## How To Order

Examples

PE3000LF-100
PE3000-100
PE3000LF-100CM
PE3000-100CM

Part Number Configuration

PE3 [ ///  ] [ yy ] - [ xx ] [ uu ]

00 - 99999
LF = RoHS Compliant
< Blank > = Standard
Note: LF applies only to RF cables

CM = Centimeters
< Blank > = Inches
Length

NOTES:
1. UNLESS OTHERWISE SPECIFIED ALL DIMENSIONS ARE NOMINAL.
2. ALL SPECIFICATIONS ARE SUBJECT TO CHANGE WITHOUT NOTICE AT ANY TIME.
3. DIMENSIONS ARE IN INCHES [mm].
4. LENGTH TOLERANCE IS ± 1.5% OR 3/8", WHICHEVER IS GREATER.

DWG TITLE
**PE39342H**

FSCM NO. 53919

CAD FILE 41613

SCALE N/A

SIZE A

ebeestock
Ebeestock.com
8th Floor, Building 1, Yongfu Science
and Technology Center Industrial Park,
Nanzha District 5, Humen,523900, Dongguan, Guangdong, China.
**Webstie:** www.ebeestock.com **Email:** sales@ebeestock.com

© 2022 Ebeestock Enterprises All Rights Reserved