SMA Female to Violet FAKRA Plug Cable 60 Inch Length Using E T38358 Coax

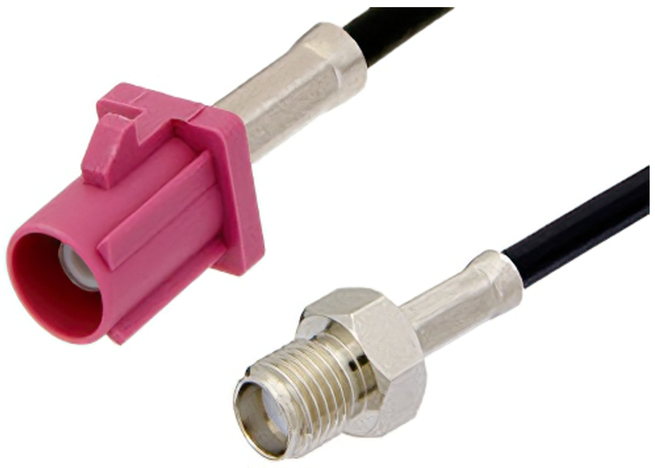

RF Cable Assemblies Technical Data Sheet

ET22459

Configuration

- Connector 1: SMA Female
- Connector 2: FAKRA Plug
- Cable Type: ET-C100-LSZH

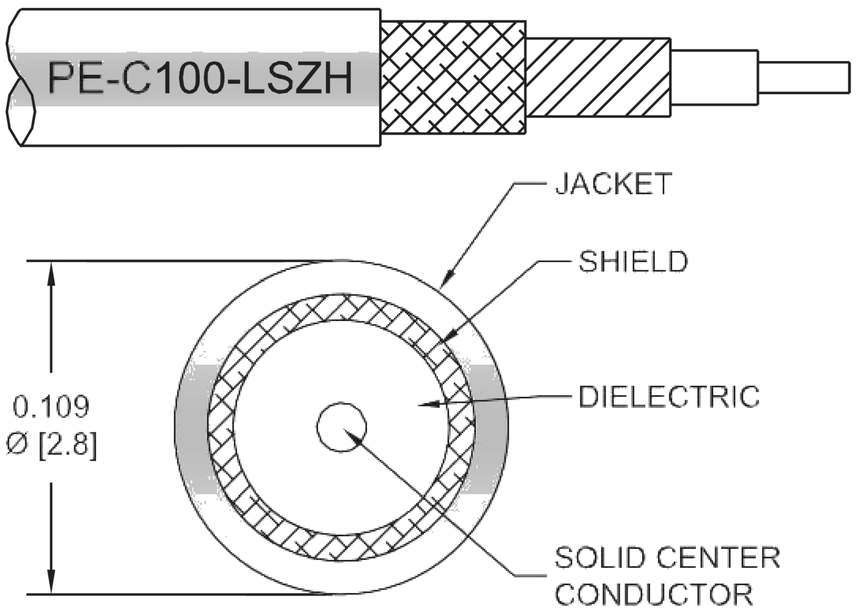

Electrical Specifications

Description	Minimum	Typical	Maximum	Units
Frequency Range	DC		4	GHz
Velocity of Propagation		66		%
RF Shielding	90			dB
Capacitance		30.8 [101.05]		pF/ft [pF/m]
Inductance		0.077 [0.25]		uH/ft [uH/m]
Jacket Spark			2,000	Vrms

Specifications by Frequency

Description	F1	F2	F3	F4	F5	Units
Frequency	0.1	0.25	0.5	1	4	GHz
Insertion Loss (Typ.)	0.55	0.777	1.031	1.382	2.646	dB

Mechanical Specifications

Cable Assembly

Length*	60 in [152.4 cm]
Diameter	0.37 in [9.4 mm]
Weight	0.141 lbs [63.96 g]

Click the following link (or enter part number in “SEARCH” on website) to obtain additional part information including price, inventory and certifications: SMA Female to Violet FAKRA Plug Cable 60 Inch Length Using ET-C100-LSZH Coax ET22459

8th Floor, Building 1, Yongfu Science and Technology Center Industrial Park, Nanzha District 5, Humen,523900, Dongguan, Guangdong, China.

Webstie:www.ebeestock.com Email:sales@ebeestock.com

© 2022 Ebeestock Enterprises All Rights Reserved

SMA Female to Violet FAKRA Plug Cable 60 Inch Length Using E T38358 Coax

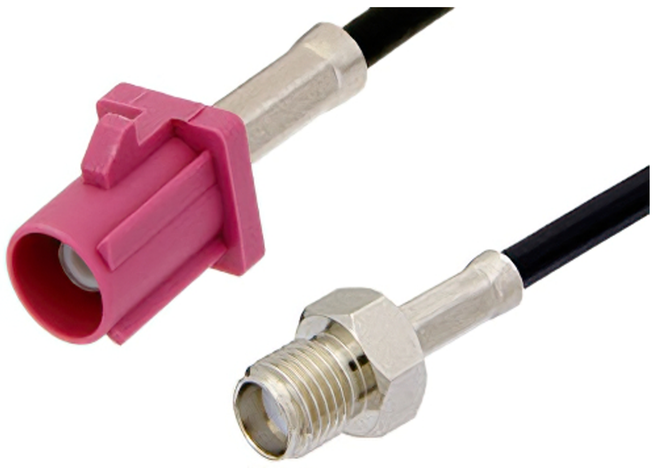

RF Cable Assemblies Technical Data Sheet ET22459

Cable

Cable Type	ET-C100-LSZH
Impedance	50 Ohms
Inner Conductor Type	Solid
Inner Conductor Material and Plating	Copper Clad Steel
Dielectric Type	PE
Number of Shields	2
Shield Layer 1	Aluminum Tape
Shield Layer 2	Tinned Copper Braid
Jacket Material	LSZH, Black
Jacket Diameter	0.109 in [2.77 mm]
One Time Minimum Bend Radius	0.25 in [6.35 mm]
Repeated Minimum Bend Radius	1 in [25.4 mm]
Bending Moment	0.1 lbs-ft [0.14 N-m]
Flat Plate Crush	10 lbs/in [0.18 Kg/mm]
Tensile Strength	15 lbs [6.8 Kg]

Connectors

Description	Connector 1	Connector 2
Type	SMA Female	FAKRA Plug
Specification	MIL-STD-348	
Impedance	50 Ohms	50 Ohms
Configuration	Straight	Straight
Mating Cycles	100	
Contact Material and Plating	Beryllium Copper, Gold	Phosphor Bronze, Gold
Dielectric Type	Teflon	Teflon
Outer Conductor Material and Plating		Brass, Nickel
Body Material and Plating	Brass, Nickel	Plastic

Mechanical Specification Notes:
*All cable assemblies have a length tolerance of 1.5% or ± 3/8”, whichever is greater.

Compliance Certifications (see product page for current document)

Plotted and Other Data

Notes:
- Values at 25°C, sea level.

Click the following link (or enter part number in “SEARCH” on website) to obtain additional part information including price, inventory and certifications: SMA Female to Violet FAKRA Plug Cable 60 Inch Length Using ET-C100-LSZH Coax ET22459

© 2022 Ebeestock Enterprises All Rights Reserved

SMA Female to Violet FAKRA Plug Cable 60 Inch Length Using E T38358 Coax

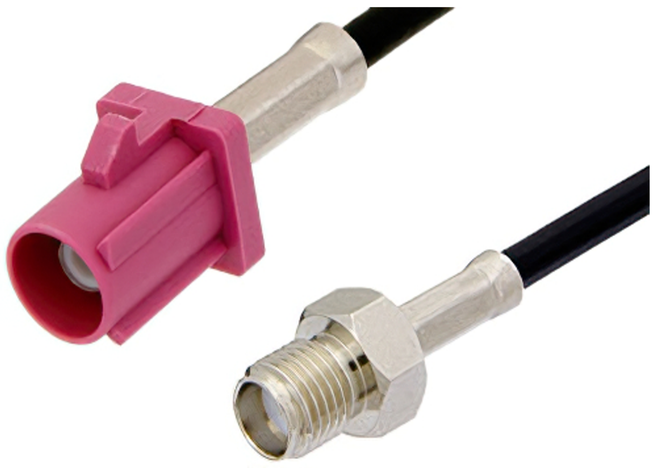

RF Cable Assemblies Technical Data Sheet ET22459

How to Order

Part Number Configuration: **ET39344H - xx uu**

- ET39344H: Base Number
- xx: Length
- uu: Unit of Measure:
  - cm = Centimeters
  - <blank> = Inches

Example: ET39344H-12 = 12 inches long cable
ET39344H-100cm = 100 cm long cable

SMA Female to Violet FAKRA Plug Cable 60 Inch Length Using ET-C100-LSZH Coax from Ebeestock Enterprises has same day shipment for domestic and International orders. Our RF, microwave and millimeter wave products maintain a 99.4% availability and are part of the broadest selection in the industry.

Click the following link (or enter part number in “SEARCH” on website) to obtain additional part information including price, inventory and certifications: SMA Female to Violet FAKRA Plug Cable 60 Inch Length Using ET-C100-LSZH Coax ET22459

URL: https://www.ebeestock.com/sma-female-to-violet-fakra-plug-cable-12-inch-length-using-pe-c100-lszh-coax-0022455

The information contained in this document is accurate to the best of our knowledge and representative of the part described herein. It may be necessary to make modifications to the part and/or the documentation of the part, in order to implement improvements. Ebeestock reserves the right to make such changes as required. Unless otherwise stated, all specifications are nominal. Ebeestock does not make any representation or warranty regarding the suitability of the part described herein for any particular purpose, and Ebeestock does not assume any liability arising out of the use of any part or documentation.

8th Floor, Building 1, Yongfu Science and Technology Center Industrial Park,
Nanzha District 5, Humen,523900, Dongguan, Guangdong, China.

Webstie:www.ebeestock.com Email:sales@ebeestock.com

© 2022 Ebeestock Enterprises All Rights Reserved

ET22459 CAD Drawing

SMA Female to Violet FAKRA Plug Cable 60 Inch Length Using ET-C100-LSZH Coax

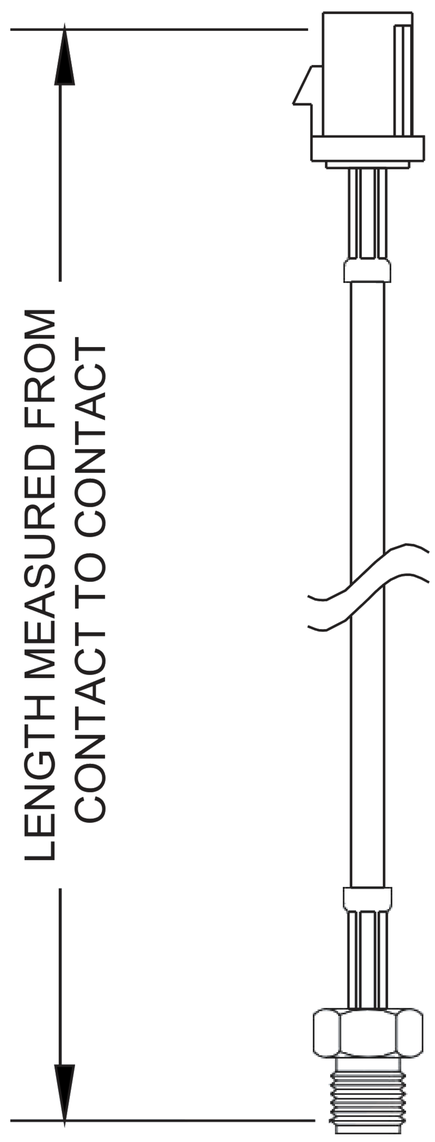

PE-C100

VIOLET FAKRA
PLUG

SMA FEMALE

How To Order

Part Number Configuration

PE3 [/ / /] [yy] - [xx] [uu]

00 - 99999

LF = RoHS Compliant
< Blank > = Standard

CM = Centimeters
< Blank > = Inches

Length

Note: LF applies only to RF cables

Examples	Part # Ext.	Length In Inches	Part # Ext.	Length In Centimeters
PE3000LF-100	-12	12"	-25CM	25Cm
PE3000-100	-24	24"	-50CM	50Cm
PE3000LF-100CM	-36	36"	-75CM	75Cm
PE3000-100CM	-48	48"	-100CM	100Cm
	-60	60"	-125CM	125Cm
	-xx	Custom Length	-xxCM	Custom Length

NOTES:
1. UNLESS OTHERWISE SPECIFIED ALL DIMENSIONS ARE NOMINAL.
2. ALL SPECIFICATIONS ARE SUBJECT TO CHANGE WITHOUT NOTICE AT ANY TIME.
3. DIMENSIONS ARE IN INCHES [mm].
4. LENGTH TOLERANCE IS ± 1.5% OR 3/8", WHICHEVER IS GREATER.

DWG TITLE

PE39344H

SIZE A | SCALE N/A | CAD FILE 41613

FSCM NO. 53919

ebeestock
Ebeestock.com
8th Floor, Building 1, Yongfu Science
and Technology Center Industrial Park,
Nanzha District 5, Humen,523900, Dongguan, Guangdong, China.
Webstie: www.ebeestock.com **Email:** sales@ebeestock.com

© 2022 Ebeestock Enterprises All Rights Reserved