SMA Female Bulkhead to Water Blue FAKRA Jack Cable 12 Inch L ength Using ET38358 Coax with HeatShrink

RF Cable Assemblies Technical Data Sheet ET22743

Configuration

- Connector 1: SMA Female Bulkhead
- Connector 2: FAKRA Jack
- Cable Type: ET-C100-LSZH

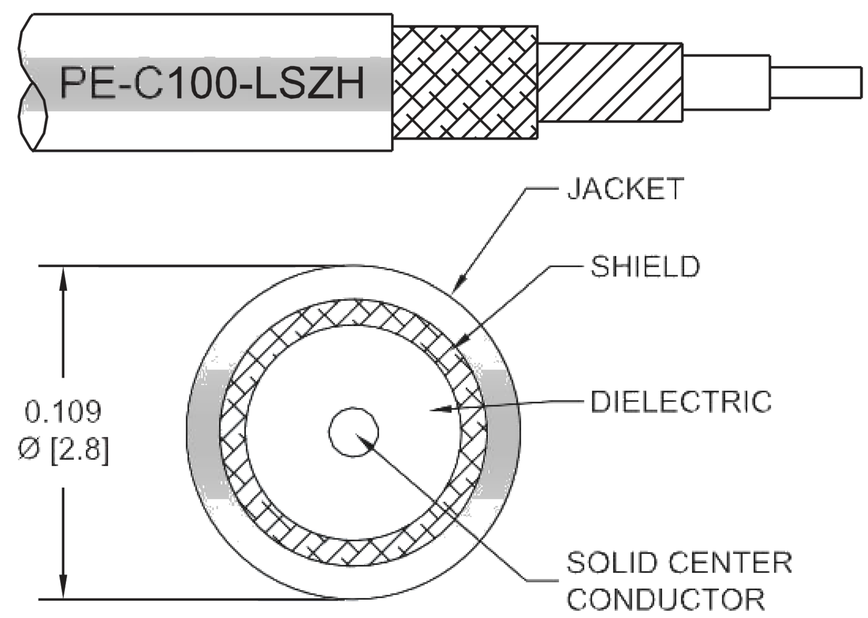

Features

- Max Frequency 4 GHz
- Shielding Effectivity > 90 dB
- 66% Phase Velocity
- Double Shielded
- LSZH Jacket

Applications

- General Purpose
- Laboratory Use

Description

Ebeestock's ET22743 SMA female bulkhead to water blue FAKRA jack 12 inch cable using ET-C100-LSZH coax is part of our full line of RF components available for same-day shipping. Ebeestock's flexible RF cable assemblies are ideal for applications where tight bends and flexure are required. This Ebeestock SMA to FAKRA cable assembly has a female to jack gender configuration with 50 ohm flexible ET-C100-LSZH coax. The ET22743 SMA female to FAKRA jack cable assembly operates to 4 GHz. Our RF cable assembly with SMA bulkhead interface allows designers to create external connections on their product enclosures, and can be used in a variety of other rack mount and panel mount applications. The double shielding of this Ebeestock cable assembly provides excellent shielding effectiveness of better than 90dB.

Custom versions of most RF cable assemblies can be built and shipped same day. Custom cable assembly lengths can be obtained by specifying the desired length on the web site at time of order or by contacting a sales representative. Other available RF cable assembly value added services include connector orientation or clocking, heat shrink booting and custom labeling. RF testing can also be performed to document the electrical performance of your cable assembly.

Click the following link (or enter part number in "SEARCH" on website) to obtain additional part information including price, inventory and certifications: SMA Female Bulkhead to Water Blue FAKRA Jack Cable 12 Inch Length Using ET-C100-LSZH Coax with HeatShrink ET22743

8th Floor, Building 1, Yongfu Science and Technology Center Industrial Park,
Nanzha District 5, Humen,523900, Dongguan, Guangdong, China.

Webstie:www.ebeestock.com Email:sales@ebeestock.com

© 2022 Ebeestock Enterprises All Rights Reserved

SMA Female Bulkhead to Water Blue FAKRA Jack Cable 12 Inch L ength Using ET38358 Coax with HeatShrink

RF Cable Assemblies Technical Data Sheet ET22743

Electrical Specifications

Description	Minimum	Typical	Maximum	Units
Frequency Range	DC		4	GHz
VSWR			1.5:1	
Velocity of Propagation		66		%
RF Shielding	90			dB
Group Delay		1.62 [5.31]		ns/ft [ns/m]
Capacitance		30.8 [101.05]		pF/ft [pF/m]
Inductance		0.077 [0.25]		uH/ft [uH/m]
DC Resistance Inner Conductor		81 [265.75]		Ohms/1000ft [Ohms/
Km]				
DC Resistance Outer Conductor		9.5 [31.17]		Ohms/1000ft [Ohms/
Km]				
Jacket Spark			2,000	Vrms

Specifications by Frequency

Description	F1	F2	F3	F4	F5	Units
Frequency	0.25	0.5	1	2.5	4	GHz
Insertion Loss (Max.)	0.32	0.37	0.44	0.61	0.73	dB

Electrical Specification Notes:
The Insertion Loss data above is based on the performance specifications of the coax used in this assembly. The Insertion Loss includes an estimated insertion loss of 0.2dB of connector loss.

Mechanical Specifications

Cable Assembly

Length*	12 in [304.8 mm]
Diameter	0.433 in [11 mm]

Cable

Cable Type	ET-C100-LSZH
Impedance	50 Ohms
Inner Conductor Type	Solid
Inner Conductor Material and Plating	Copper Clad Steel
Dielectric Type	PE
Number of Shields	2
Shield Layer 1	Aluminum Tape
Shield Layer 2	Tinned Copper Braid

Click the following link (or enter part number in “SEARCH” on website) to obtain additional part information including price, inventory and certifications: SMA Female Bulkhead to Water Blue FAKRA Jack Cable 12 Inch Length Using ET-C100-LSZH Coax with HeatShrink ET22743

8th Floor, Building 1, Yongfu Science and Technology Center Industrial Park,
Nanzha District 5, Humen,523900, Dongguan, Guangdong, China.

Webstie:www.ebeestock.com Email:sales@ebeestock.com

© 2022 Ebeestock Enterprises All Rights Reserved

SMA Female Bulkhead to Water Blue FAKRA Jack Cable 12 Inch L ength Using ET38358 Coax with HeatShrink

RF Cable Assemblies Technical Data Sheet ET22743

Jacket Material	LSZH, Black
Jacket Diameter	0.109 in [2.77 mm]
One Time Minimum Bend Radius	0.25 in [6.35 mm]
Repeated Minimum Bend Radius	1 in [25.4 mm]
Bending Moment	0.1 lbs-ft [0.14 N-m]
Flat Plate Crush	10 lbs/in [0.18 Kg/mm]
Tensile Strength	15 lbs [6.8 Kg]

Connectors

Description	Connector 1	Connector 2
Type	SMA Female Bulkhead	FAKRA Jack
Impedance	50 Ohms	50 Ohms
Configuration	Straight	Straight
Contact Material and Plating	Beryllium Copper, Gold	Phosphor Bronze, Gold
Dielectric Type	PTFE	PTFE
Outer Conductor Material and Plating	Brass, Gold	Brass, Nickel
Body Material and Plating	Brass, Gold	Plastic

Mechanical Specification Notes:
*All cable assemblies have a length tolerance of 1.5% or ± 3/8”, whichever is greater.

Environmental Specifications

Temperature

Operating Range	-40 to +85 deg C

Compliance Certifications (see product page for current document)

Plotted and Other Data

Notes:

Click the following link (or enter part number in “SEARCH” on website) to obtain additional part information including price, inventory and certifications: SMA Female Bulkhead to Water Blue FAKRA Jack Cable 12 Inch Length Using ET-C100-LSZH Coax with HeatShrink ET22743

8th Floor, Building 1, Yongfu Science and Technology Center Industrial Park,
Nanzha District 5, Humen,523900, Dongguan, Guangdong, China.

Webstie:www.ebeestock.com Email:sales@ebeestock.com

© 2022 Ebeestock Enterprises All Rights Reserved

SMA Female Bulkhead to Water Blue FAKRA Jack Cable 12 Inch L ength Using ET38358 Coax with HeatShrink

RF Cable Assemblies Technical Data Sheet ET22743

How to Order

Part Number Configuration: **ET3W04917/HS - xx uu**

- uu — Unit of Measure:
  - cm = Centimeters
  - <blank> = Inches
- xx — Length
- ET3W04917/HS — Base Number

Example: ET22743 = 12 inches long cable
ET3W04917/HS-100cm = 100 cm long cable

SMA Female Bulkhead to Water Blue FAKRA Jack Cable 12 Inch Length Using ET-C100-LSZH Coax with HeatShrink from Ebeestock Enterprises has same day shipment for domestic and International orders. Our RF, microwave and millimeter wave products maintain a 99.4% availability and are part of the broadest selection in the industry.

Click the following link (or enter part number in “SEARCH” on website) to obtain additional part information including price, inventory and certifications: SMA Female Bulkhead to Water Blue FAKRA Jack Cable 12 Inch Length Using ET-C100-LSZH Coax with HeatShrink ET22743

URL: https://www.ebeestock.com/sma-female-bulkhead-to-water-blue-fakra-jack-cable-12-inch-length-using-pe-c100-lszh-coax-with-heatshrink-0022743

The information contained in this document is accurate to the best of our knowledge and representative of the part described herein. It may be necessary to make modifications to the part and/or the documentation of the part, in order to implement improvements. Ebeestock reserves the right to make such changes as required. Unless otherwise stated, all specifications are nominal. Ebeestock does not make any representation or warranty regarding the suitability of the part described herein for any particular purpose, and Ebeestock does not assume any liability arising out of the use of any part or documentation.

8th Floor, Building 1, Yongfu Science and Technology Center Industrial Park,
Nanzha District 5, Humen,523900, Dongguan, Guangdong, China.

Webstie:www.ebeestock.com Email:sales@ebeestock.com

© 2022 Ebeestock Enterprises All Rights Reserved

REVISIONS			
REV.	DESCRIPTION	DATE	APPROVED
A	INITIAL RELEASE	04/30/19	S.ELLIS

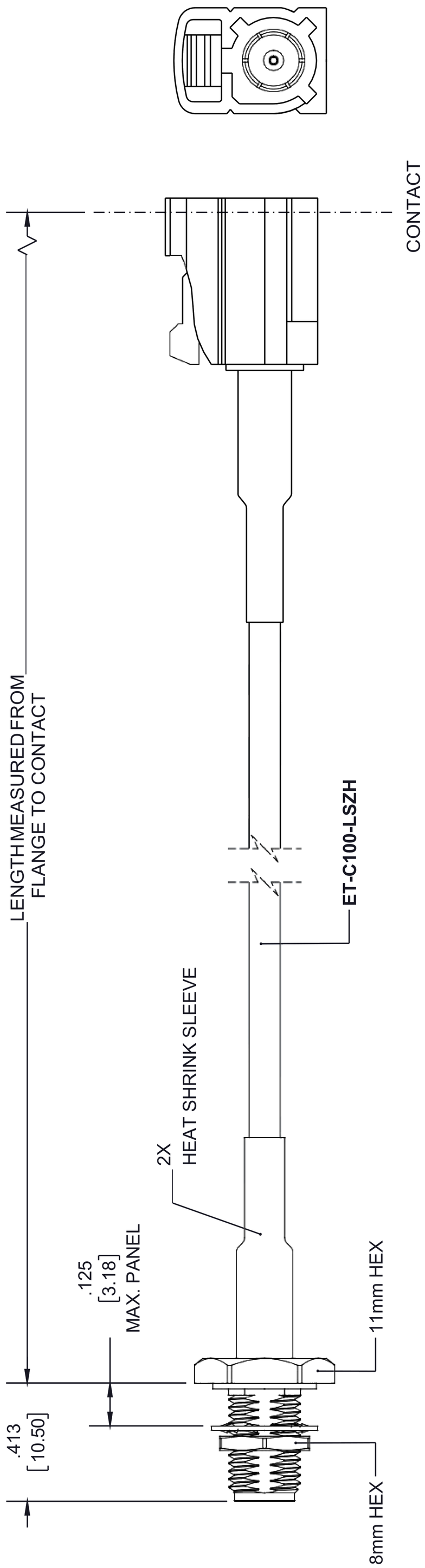

FAKRA JACK CODING - Z

SMA FEMALE BULKHEAD

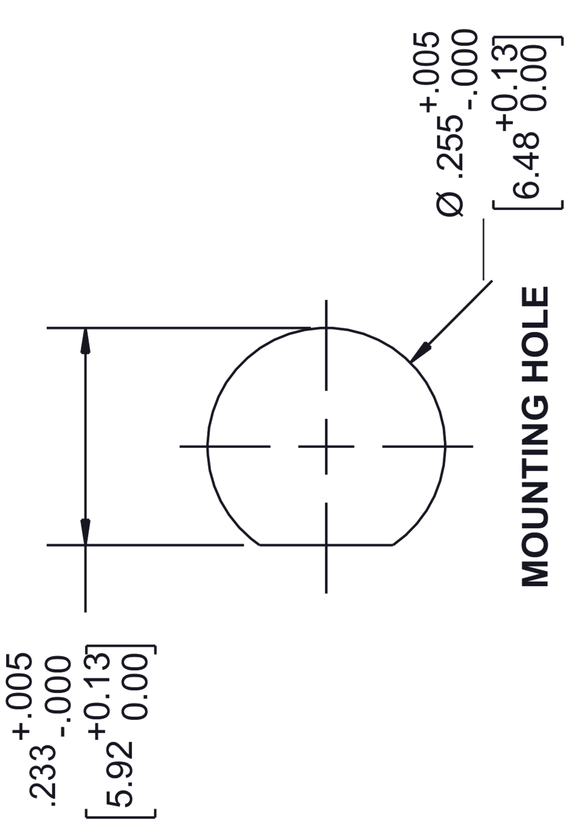

MOUNTING HOLE

THE INFORMATION AND DESIGN IN THIS DOCUMENT IS THE PROPERTY OF Ebeestock CORPORATION. ALL RIGHTS RESERVED.

ebeestock
Ebeestock.com
8th Floor, Building 1, Yongfu Science and Technology Center Industrial Park, Nanzha District 5, Humen,523900, Dongguan, Guangdong, China.
Webstie: www.ebeestock.com **Email:** sales@ebeestock.com

SHEET	OF
1	1
SCALE	N/A

UNLESS OTHERWISE SPECIFIED
LEADING DIMENSIONS ARE INCHES
DIMENSIONS IN [ ] ARE MILLIMETERS

TOLERANCES:

.X=± .2 [5.08] FRACTIONS
.XX=± .01 [.25] ± 1/32
.XXX=± .005 [.13] ANGLES ± 1°
ALL DIMENSIONS SHOWN ARE FOR REFERENCE ONLY.

THIRD ANGLE PROJECTION

SIZE	CAGE	DRAWN BY	PART NUMBER	REV
A	53919	K.DANG	ET3W04917HS	A

THESE COMMODITIES, TECHNOLOGY OR SOFTWARE WERE EXPORTED FROM THE UNITED STATES IN ACCORDANCE WITH THE EXPORT ADMINISTRATION REGULATIONS. DIVERSION CONTRARY TO U.S. LAW PROHIBITED.

T-Rev.B