MCX Plug Right Angle to MCX Jack Bulkhead Cable 36 Inch Leng th Using ET-ET-RG174 Coax

RF Cable Assemblies Technical Data Sheet ET24894

Configuration

- Connector 1: MCX Plug Right Angle
- Connector 2: MCX Jack Bulkhead
- Cable Type: ET-RG174

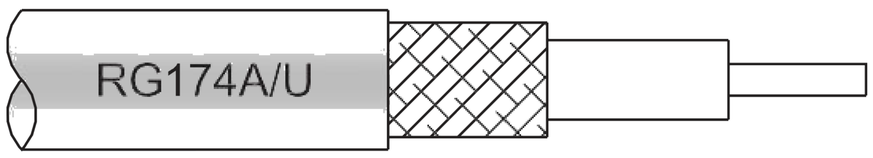

Features

- Max Frequency 1 GHz
- 66% Phase Velocity
- PVC Jacket

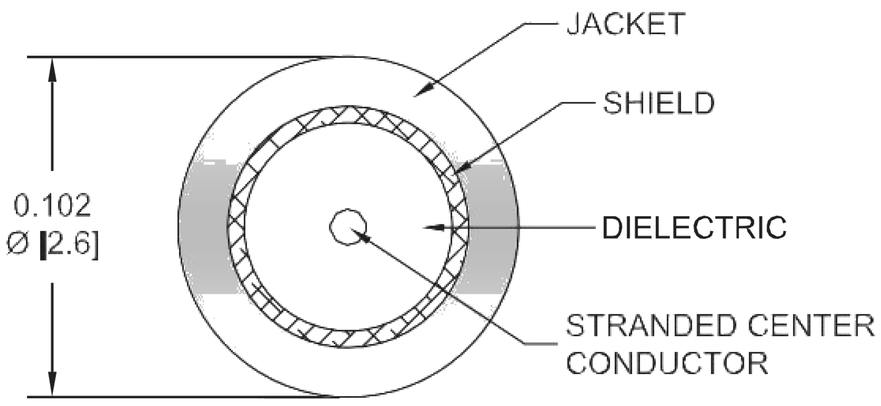

Applications

- General Purpose
- Laboratory Use

Description

Ebeestock's ET24894 MCX plug right angle to MCX jack bulkhead 36 inch cable using ET-RG174 coax is part of our full line of RF components available for same-day shipping. Ebeestock's flexible RF cable assemblies are ideal for applications where tight bends and flexure are required. This Ebeestock MCX to MCX cable assembly has a plug to jack gender configuration with 50 ohm flexible ET-RG174 coax. The ET24894 MCX plug to MCX jack cable assembly operates to 1 GHz. The right angle MCX interface on the ET-RG174 cable allows for easier connections in tight spaces. Our RF cable assembly with MCX bulkhead interface allows designers to create external connections on their product enclosures, and can be used in a variety of other rack mount and panel mount applications.

Custom versions of most RF cable assemblies can be built and shipped same day. Custom cable assembly lengths can be obtained by specifying the desired length on the web site at time of order or by contacting a sales representative. Other available RF cable assembly value added services include connector orientation or clocking, heat shrink booting and custom labeling. RF testing can also be performed to document the electrical performance of your cable assembly.

Electrical Specifications

Description	Minimum	Typical	Maximum	Units
Frequency Range	DC		1,000	MHz
VSWR			1.5:1	
Velocity of Propagation		66		%
Capacitance		31.1 [102.03]		pF/ft [pF/m]

Click the following link (or enter part number in "SEARCH" on website) to obtain additional part information including price, inventory and certifications: MCX Plug Right Angle to MCX Jack Bulkhead Cable 36 Inch Length Using ET-RG174 Coax ET24894

8th Floor, Building 1, Yongfu Science and Technology Center Industrial Park,
Nanzha District 5, Humen,523900, Dongguan, Guangdong, China.

Webstie:www.ebeestock.com Email:sales@ebeestock.com

© 2022 Ebeestock Enterprises All Rights Reserved

MCX Plug Right Angle to MCX Jack Bulkhead Cable 36 Inch Leng th Using ET-ET-RG174 Coax

RF Cable Assemblies Technical Data Sheet ET24894

Specifications by Frequency

Description	F1	F2	F3	F4	F5	Units
Frequency	100	250	500	1,000		MHz
Insertion Loss (Max.)	0.56	0.67	0.87	1.26		dB

Electrical Specification Notes:
The Insertion Loss data above is based on the performance specifications of the coax use in this assembly. The Insertion Loss includes an estimated insertion loss of 0.3dB of connector Loss

Mechanical Specifications

Cable Assembly

Length*	36 in [914.4 mm]
Diameter	0.25 in [6.35 mm]

Cable

Cable Type	ET-RG174
Impedance	50 Ohms
Inner Conductor Type	Stranded
Inner Conductor Material and Plating	Copper Clad Steel, Silver
Dielectric Type	PE
Number of Shields	1
Shield Layer 1	Tinned Copper Braid
Jacket Material	PVC, Black
Jacket Diameter	0.11 in [2.79 mm]

Connectors

Description	Connector 1	Connector 2
Type	MCX Plug Right Angle	MCX Jack Bulkhead
Specification	CECC 22220	CECC 22220
Impedance	50 Ohms	50 Ohms
Contact Material and Plating	Brass, Gold	Beryllium Copper, Gold
Contact Plating Specification	30 µin minimum	50 µin minimum
Dielectric Type	PTFE	PTFE
Body Material and Plating	Brass, Nickel	Brass, Gold
Body Plating Specification	100 µin minimum	30 µin minimum

Mechanical Specification Notes:
*All cable assemblies have a length tolerance of 1.5% or ± 3/8”, whichever is greater.

Click the following link (or enter part number in “SEARCH” on website) to obtain additional part information including price, inventory and certifications: MCX Plug Right Angle to MCX Jack Bulkhead Cable 36 Inch Length Using ET-RG174 Coax ET24894

8th Floor, Building 1, Yongfu Science and Technology Center Industrial Park,
Nanzha District 5, Humen,523900, Dongguan, Guangdong, China.

Webstie:www.ebeestock.com Email:sales@ebeestock.com

© 2022 Ebeestock Enterprises All Rights Reserved

MCX Plug Right Angle to MCX Jack Bulkhead Cable 36 Inch Leng
th Using ET-ET-RG174 Coax

RF Cable Assemblies Technical Data Sheet ET24894

Compliance Certifications (see product page for current document)

Plotted and Other Data

Notes:

How to Order

Part Number Configuration: **ET3W01300 - xx uu**

- uu — Unit of Measure:
  - cm = Centimeters
  - <blank> = Inches
- xx — Length
- ET3W01300 — Base Number

Example: ET3W01300-12 = 12 inches long cable
ET3W01300-100cm = 100 cm long cable

MCX Plug Right Angle to MCX Jack Bulkhead Cable 36 Inch Length Using ET-RG174 Coax from Ebeestock Enterprises has same day shipment for domestic and International orders. Our RF, microwave and millimeter wave products maintain a 99.4% availability and are part of the broadest selection in the industry.

Click the following link (or enter part number in “SEARCH” on website) to obtain additional part information including price, inventory and certifications: MCX Plug Right Angle to MCX Jack Bulkhead Cable 36 Inch Length Using ET-RG174 Coax ET24894

URL: https://www.ebeestock.com/mcx-plug-right-angle-to-mcx-jack-bulkhead-cable-12-inch-length-using-rg174-coax-0024892

The information contained in this document is accurate to the best of our knowledge and representative of the part described herein. It may be necessary to make modifications to the part and/or the documentation of the part, in order to implement improvements. Ebeestock reserves the right to make such changes as required. Unless otherwise stated, all specifications are nominal. Ebeestock does not make any representation or warranty regarding the suitability of the part described herein for any particular purpose, and Ebeestock does not assume any liability arising out of the use of any part or documentation.

8th Floor, Building 1, Yongfu Science and Technology Center Industrial Park,
Nanzha District 5, Humen,523900, Dongguan, Guangdong, China.

Webstie:www.ebeestock.com Email:sales@ebeestock.com

© 2022 Ebeestock Enterprises All Rights Reserved

© 2022 Ebeestock Enterprises All Rights Reserved

www.ebeestock.com

REVISIONS			
REV.	DESCRIPTION	DATE	APPROVED
A	INITIAL RELEASE	04/30/19	S.ELLIS

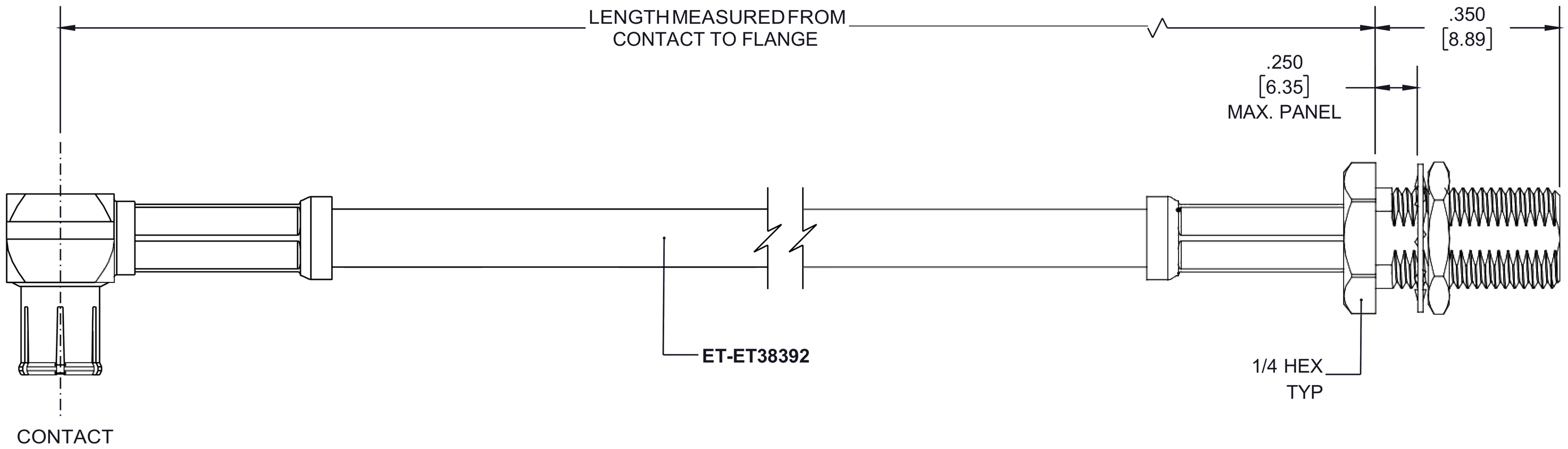

MCX PLUG
RA

MCX JACK
BULKHEAD

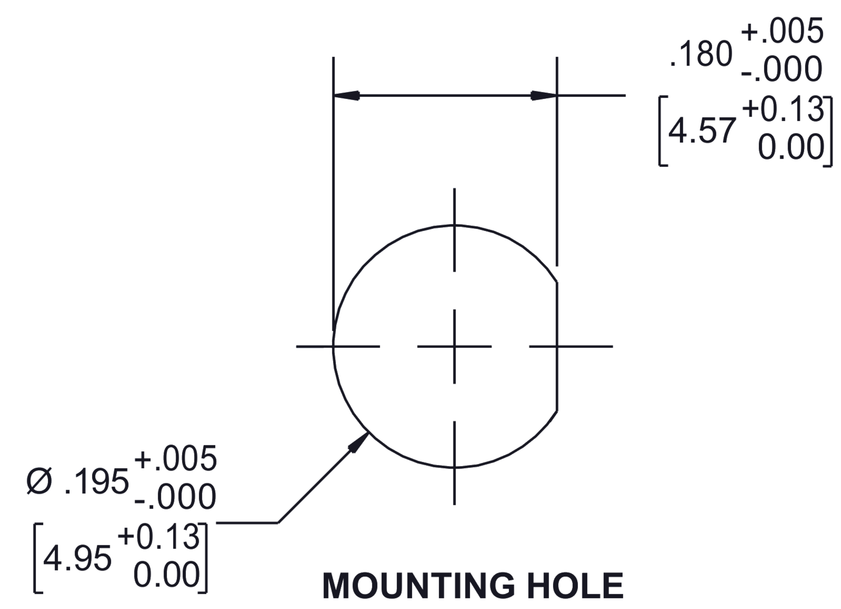

MOUNTING HOLE

UNLESS OTHERWISE SPECIFIED
LEADING DIMENSIONS ARE INCHES
DIMENSIONS IN [ ] ARE MILLIMETERS

TOLERANCES:

.X=± .2 [5.08] | FRACTIONS
.XX=± .01 [.25] | ± 1/32
.XXX=± .005 [.13] | ANGLES ± 1°

ALL DIMENSIONS SHOWN ARE FOR REFERENCE ONLY.

THIRD ANGLE PROJECTION

ebeestock
Ebeestock.com
8th Floor, Building 1, Yongfu Science and Technology Center Industrial Park, Nanzha District 5, Humen,523900, Dongguan, Guangdong, China.
Webstie: www.ebeestock.com **Email:** sales@ebeestock.com
e-mail: sales@Ebeestock.com

THE INFORMATION AND DESIGN IN THIS DOCUMENT IS THE PROPERTY OF Ebeestock CORPORATION. ALL RIGHTS RESERVED.

SHEET 1 OF 1

SCALE N/A

SIZE	CAGE	DRAWN BY	PART NUMBER	REV
A	53919	K.DANG	ET3W01300	A

THESE COMMODITIES, TECHNOLOGY OR SOFTWARE WERE EXPORTED FROM THE UNITED STATES IN ACCORDANCE WITH THE EXPORT ADMINISTRATION REGULATIONS. DIVERSION CONTRARY TO U.S. LAW PROHIBITED.

T-Rev.B