MCX Plug to SMA Female Cable 24 Inch Length Using ET-LMR-100 Coax , LF Solder

# RF Cable Assemblies Technical Data Sheet ET24938

## Configuration

- Connector 1: MCX Plug
- Connector 2: SMA Female
- Cable Type: ET-LMR-100A

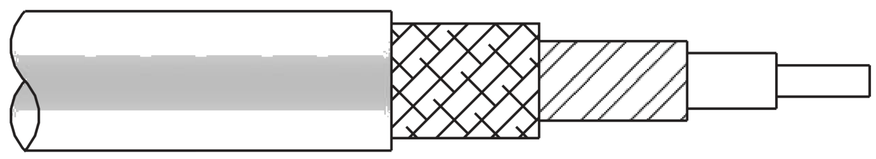

## Features

- Max Frequency 3 GHz
- Shielding Effectivity > 90 dB
- 66% Phase Velocity
- Double Shielded
- PVC Jacket

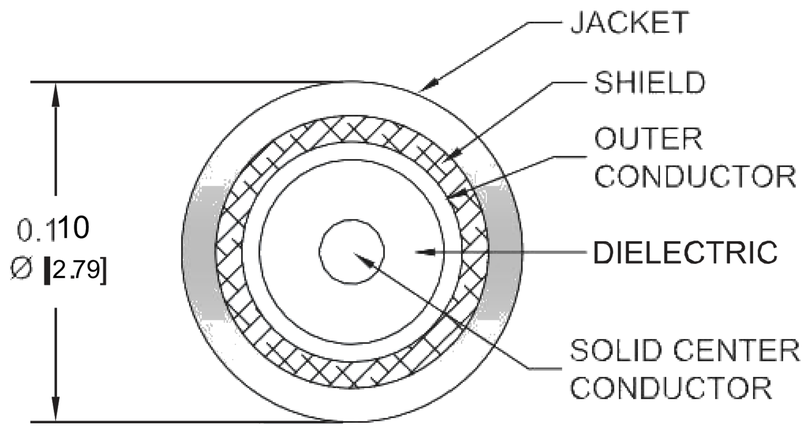


## Applications

- General Purpose
- Laboratory Use

### Description

Ebeestock's ET24938 MCX plug to SMA female 24 inch cable using ET-LMR-100 coax is part of our full line of RF components available for same-day shipping. Ebeestock's flexible RF cable assemblies are ideal for applications where tight bends and flexure are required. This Ebeestock MCX to SMA cable assembly has a plug to female gender configuration with 50 ohm flexible ET-LMR-100A coax. The ET24938 MCX plug to SMA female cable assembly operates to 3 GHz. The double shielding of this Ebeestock cable assembly provides excellent shielding effectiveness of better than 90dB.

Custom versions of most RF cable assemblies can be built and shipped same day. Custom cable assembly lengths can be obtained by specifying the desired length on the web site at time of order or by contacting a sales representative. Other available RF cable assembly value added services include connector orientation or clocking, heat shrink booting and custom labeling. RF testing can also be performed to document the electrical performance of your cable assembly.

Click the following link (or enter part number in "SEARCH" on website) to obtain additional part information including price, inventory and certifications: MCX Plug to SMA Female Cable 24 Inch Length Using ET-LMR-100 Coax , LF Solder ET3W-08203LF-24

8th Floor, Building 1, Yongfu Science and Technology Center Industrial Park,
Nanzha District 5, Humen,523900, Dongguan, Guangdong, China.

Webstie:www.ebeestock.com Email:sales@ebeestock.com

© 2022 Ebeestock Enterprises All Rights Reserved

MCX Plug to SMA Female Cable 24 Inch Length Using ET-LMR-100 Coax , LF Solder

# RF Cable Assemblies Technical Data Sheet ET24938

## Electrical Specifications

| Description | Minimum | Typical | Maximum | Units |
|---|---|---|---|---|
| Frequency Range | DC | | 3 | GHz |
| VSWR | | | 1.45:1 | |
| Velocity of Propagation | | 66 | | % |
| RF Shielding | 90 | | | dB |
| Group Delay | | 1.54 [5.05] | | ns/ft [ns/m] |
| Capacitance | | 30.8 [101.05] | | pF/ft [pF/m] |
| Inductance | | 0.077 [0.25] | | uH/ft [uH/m] |
| DC Resistance Inner Conductor | | 81 [265.75] | | Ω/1000ft [Ω/Km] |
| DC Resistance Outer Conductor | | 9.5 [31.17] | | Ω/1000ft [Ω/Km] |
| Jacket Spark | | | 2,000 | Vrms |

## Specifications by Frequency

| Description | F1 | F2 | F3 | F4 | F5 | Units |
|---|---|---|---|---|---|---|
| Frequency | 0.1 | 0.25 | 0.5 | 1 | 3 | GHz |
| Insertion Loss (Max.) | 0.32 | 0.34 | 0.4 | 0.5 | 0.9 | dB |

Electrical Specification Notes:
The Insertion Loss data above is based on the performance specifications of the coax used in this assembly. Insertion Loss is estimated as 0.1 dB per connector.

## Mechanical Specifications

### Cable Assembly

| | |
|---|---|
| Length* | 24 in [609.6 mm] |
| Diameter | 0.312 in [7.92 mm] |

### Cable

| | |
|---|---|
| Cable Type | ET-LMR-100A |
| Impedance | 50 Ohms |
| Inner Conductor Type | Solid |
| Inner Conductor Material and Plating | Copper Clad Steel |
| Dielectric Type | PE |
| Number of Shields | 2 |
| Shield Layer 1 | Aluminum Tape |
| Shield Layer 2 | Tinned Copper Braid |
| Jacket Material | PVC, Black |
| Jacket Diameter | 0.11 in [2.79 mm] |

Click the following link (or enter part number in “SEARCH” on website) to obtain additional part information including price, inventory and certifications: MCX Plug to SMA Female Cable 24 Inch Length Using ET-LMR-100 Coax , LF Solder ET3W-08203LF-24

8th Floor, Building 1, Yongfu Science and Technology Center Industrial Park,
Nanzha District 5, Humen,523900, Dongguan, Guangdong, China.

Webstie:www.ebeestock.com Email:sales@ebeestock.com

© 2022 Ebeestock Enterprises All Rights Reserved

MCX Plug to SMA Female Cable 24 Inch Length Using ET-LMR-100 Coax , LF Solder

# RF Cable Assemblies Technical Data Sheet ET24938

| | |
|---|---|
| One Time Minimum Bend Radius | 0.25 in [6.35 mm] |
| Repeated Minimum Bend Radius | 1 in [25.4 mm] |
| Bending Moment | 0.1 lbs-ft [0.14 N-m] |
| Flat Plate Crush | 10 lbs/in [0.18 Kg/mm] |
| Tensile Strength | 15 lbs [6.8 Kg] |

**Connectors**

| Description | Connector 1 | Connector 2 |
|---|---|---|
| Type | MCX Plug | SMA Female |
| Specification | CECC 22220 | MIL-STD-348 |
| Impedance | 50 Ohms | 50 Ohms |
| Contact Material and Plating | Brass, Gold | Gold |
| Contact Plating Specification | 30 µin minimum | MIL-G-45204 |
| Dielectric Type | PTFE | PTFE |
| Body Material and Plating | Brass, Nickel | Brass, Nickel |
| Body Plating Specification | 100 µin minimum | QQ-N-290 |

## Environmental Specifications

**Temperature**

Operating Range -40 to +85 deg C

## Compliance Certifications (see product page for current document)

## Plotted and Other Data

Notes:

Click the following link (or enter part number in “SEARCH” on website) to obtain additional part information including price, inventory and certifications: MCX Plug to SMA Female Cable 24 Inch Length Using ET-LMR-100 Coax , LF Solder ET3W-08203LF-24

8th Floor, Building 1, Yongfu Science and Technology Center Industrial Park,
Nanzha District 5, Humen,523900, Dongguan, Guangdong, China.

Webstie:www.ebeestock.com Email:sales@ebeestock.com

© 2022 Ebeestock Enterprises All Rights Reserved

MCX Plug to SMA Female Cable 24 Inch Length Using ET-LMR-100 Coax , LF Solder

# RF Cable Assemblies Technical Data Sheet ET24938

## How to Order

Part Number Configuration: **ET3W08203LF - xx uu**

- ET3W08203LF — Base Number
- xx — Length
- uu — Unit of Measure:
  - cm = Centimeters
  - <blank> = Inches

Example: ET3W08203LF-12 = 12 inches long cable
ET3W08203LF-100cm = 100 cm long cable

MCX Plug to SMA Female Cable 24 Inch Length Using ET-LMR-100 Coax , LF Solder from Ebeestock Enterprises has same day shipment for domestic and International orders. Our RF, microwave and millimeter wave products maintain a 99.4% availability and are part of the broadest selection in the industry.

Click the following link (or enter part number in “SEARCH” on website) to obtain additional part information including price, inventory and certifications: MCX Plug to SMA Female Cable 24 Inch Length Using ET-LMR-100 Coax , LF Solder ET24938

**URL:** https://www.ebeestock.com/mcx-plug-to-sma-female-cable-12-inch-length-using-lmr-100-coax-lf-solder-0024937

The information contained in this document is accurate to the best of our knowledge and representative of the part described herein. It may be necessary to make modifications to the part and/or the documentation of the part, in order to implement improvements. Ebeestock reserves the right to make such changes as required. Unless otherwise stated, all specifications are nominal. Ebeestock does not make any representation or warranty regarding the suitability of the part described herein for any particular purpose, and Ebeestock does not assume any liability arising out of the use of any part or documentation.

8th Floor, Building 1, Yongfu Science and Technology Center Industrial Park,
Nanzha District 5, Humen,523900, Dongguan, Guangdong, China.

Webstie:www.ebeestock.com Email:sales@ebeestock.com

© 2022 Ebeestock Enterprises All Rights Reserved

© 2022 Ebeestock Enterprises All Rights Reserved

www.ebeestock.com

| REVISIONS | | | |
|---|---|---|---|
| REV. | DESCRIPTION | DATE | APPROVED |
| A | INITIAL RELEASE | 8/20/2020 | S.ELLIS |

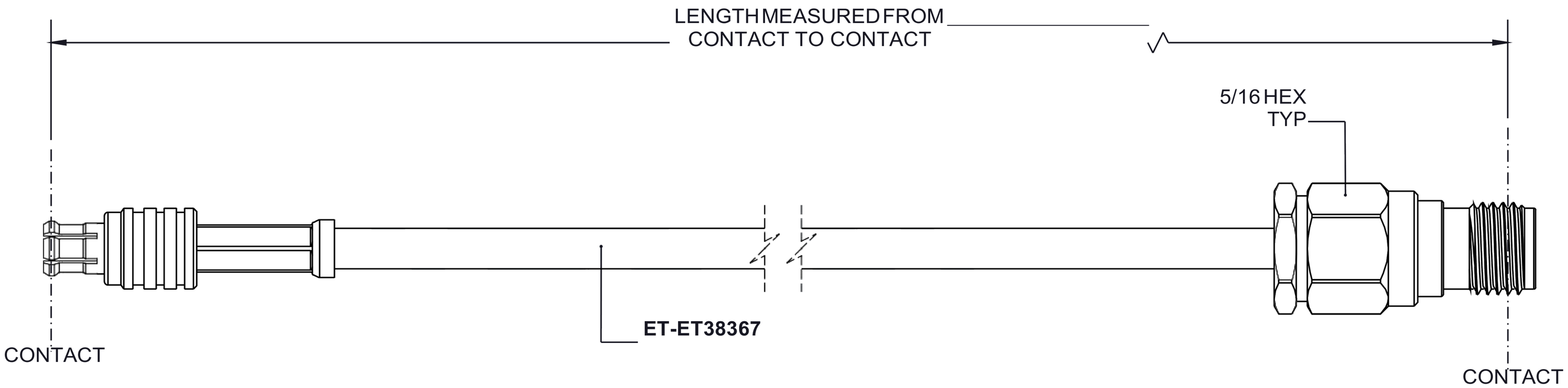


**MCX PLUG**

**SMA FEMALE**

THESE COMMODITIES, TECHNOLOGY OR SOFTWARE WERE EXPORTED FROM THE UNITED STATES IN ACCORDANCE WITH THE EXPORT ADMINISTRATION REGULATIONS. DIVERSION CONTRARY TO U.S. LAW PROHIBITED.

UNLESS OTHERWISE SPECIFIED
LEADING DIMENSIONS ARE INCHES
DIMENSIONS IN [ ] ARE MILLIMETERS

TOLERANCES:

.X = ±.2 [5.08]
.XX = ± .02 [ .51 ]
.XXX = ±.005 [ .13 ]

FRACTIONS ± 1/32
ANGLES ± 1°

CABLE LENGTH (L) TOLERANCES:

L ≤ 12 [305] = +1 [25] / -0
12 [305] < L ≤ 60 [1524] = +2 [51] / -0
60 [1524] < L ≤ 120 [3048] = +4 [102] / -0
120 [3048] < L ≤ 300 [7620] = +6 [152] / -0
300 [7620] < L = +5%L / -0

ALL DIMENSIONS SHOWN ARE FOR REFERENCE ONLY.

ebeestock
Ebeestock.com
8th Floor, Building 1, Yongfu Science and Technology Center Industrial Park,
Nanzha District 5, Humen,523900, Dongguan, Guangdong, China.
**Webstie:** www.ebeestock.com **Email:** sales@ebeestock.com

THIRD-ANGLE PROJECTION

THE INFORMATION AND DESIGN IN THIS DOCUMENT IS THE PROPERTY OF Ebeestock CORPORATION ALL RIGHTS RESERVED.

SHEET 1 OF 1

SCALE N/A

| SIZE | CAGE CODE | DRAWN BY | ITEM NO. | REV |
|---|---|---|---|---|
| A | 53919 | K.DANG | ET3W08203LF | A |