MCX Plug to SMA Female Cable 200 cm Length Using ET-LMR-100 Coax , LF Solder

RF Cable Assemblies Technical Data Sheet ET24945

Configuration

- Connector 1: MCX Plug
- Connector 2: SMA Female
- Cable Type: ET-LMR-100A

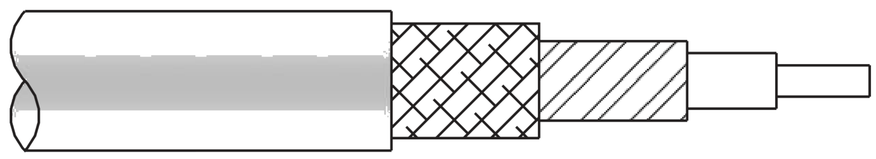

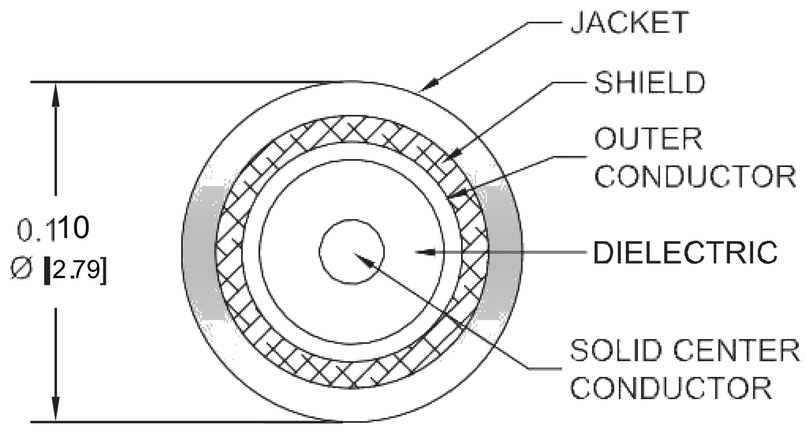

Features

- Max Frequency 3 GHz
- Shielding Effectivity > 90 dB
- 66% Phase Velocity
- Double Shielded
- PVC Jacket

Applications

- General Purpose
- Laboratory Use

Description

Ebeestock's ET24945 MCX plug to SMA female 200 cm cable using ET-LMR-100 coax is part of our full line of RF components available for same-day shipping. Ebeestock's flexible RF cable assemblies are ideal for applications where tight bends and flexure are required. This Ebeestock MCX to SMA cable assembly has a plug to female gender configuration with 50 ohm flexible ET-LMR-100A coax. The ET24945 MCX plug to SMA female cable assembly operates to 3 GHz. The double shielding of this Ebeestock cable assembly provides excellent shielding effectiveness of better than 90 dB.

Custom versions of most RF cable assemblies can be built and shipped same day. Custom cable assembly lengths can be obtained by specifying the desired length on the web site at time of order or by contacting a sales representative. Other available RF cable assembly value added services include connector orientation or clocking, heat shrink booting and custom labeling. RF testing can also be performed to document the electrical performance of your cable assembly.

Click the following link (or enter part number in "SEARCH" on website) to obtain additional part information including price, inventory and certifications: MCX Plug to SMA Female Cable 200 cm Length Using ET-LMR-100 Coax , LF Solder ET3W-08203LF-200CM

8th Floor, Building 1, Yongfu Science and Technology Center Industrial Park,
Nanzha District 5, Humen,523900, Dongguan, Guangdong, China.

Webstie:www.ebeestock.com Email:sales@ebeestock.com

© 2022 Ebeestock Enterprises All Rights Reserved

MCX Plug to SMA Female Cable 200 cm Length Using ET-LMR-100 Coax , LF Solder

RF Cable Assemblies Technical Data Sheet ET24945

Electrical Specifications

Description	Minimum	Typical	Maximum	Units
Frequency Range	DC		3	GHz
VSWR			1.45:1	
Velocity of Propagation		66		%
RF Shielding	90			dB
Group Delay		1.54 [5.05]		ns/ft [ns/m]
Capacitance		30.8 [101.05]		pF/ft [pF/m]
Inductance		0.077 [0.25]		uH/ft [uH/m]
DC Resistance Inner Conductor		81 [265.75]		Ω/1000ft [Ω/Km]
DC Resistance Outer Conductor		9.5 [31.17]		Ω/1000ft [Ω/Km]
Jacket Spark			2,000	Vrms

Specifications by Frequency

Description	F1	F2	F3	F4	F5	Units
Frequency	0.1	0.25	0.5	1	3	GHz
Insertion Loss (Max.)	0.59	0.66	0.86	1.18	2.5	dB

Electrical Specification Notes:
The Insertion Loss data above is based on the performance specifications of the coax used in this assembly. Insertion Loss is estimated as 0.1 dB per connector.

Mechanical Specifications

Cable Assembly

Length*	78.74 in [200 cm]
Diameter	0.312 in [7.92 mm]

Cable

Cable Type	ET-LMR-100A
Impedance	50 Ohms
Inner Conductor Type	Solid
Inner Conductor Material and Plating	Copper Clad Steel
Dielectric Type	PE
Number of Shields	2
Shield Layer 1	Aluminum Tape
Shield Layer 2	Tinned Copper Braid
Jacket Material	PVC, Black
Jacket Diameter	0.11 in [2.79 mm]

Click the following link (or enter part number in “SEARCH” on website) to obtain additional part information including price, inventory and certifications: MCX Plug to SMA Female Cable 200 cm Length Using ET-LMR-100 Coax , LF Solder ET3W-08203LF-200CM

8th Floor, Building 1, Yongfu Science and Technology Center Industrial Park,
Nanzha District 5, Humen,523900, Dongguan, Guangdong, China.

Webstie:www.ebeestock.com Email:sales@ebeestock.com

© 2022 Ebeestock Enterprises All Rights Reserved

MCX Plug to SMA Female Cable 200 cm Length Using ET-LMR-100 Coax , LF Solder

RF Cable Assemblies Technical Data Sheet ET24945

One Time Minimum Bend Radius	0.25 in [6.35 mm]
Repeated Minimum Bend Radius	1 in [25.4 mm]
Bending Moment	0.1 lbs-ft [0.14 N-m]
Flat Plate Crush	10 lbs/in [0.18 Kg/mm]
Tensile Strength	15 lbs [6.8 Kg]

Connectors

Description	Connector 1	Connector 2
Type	MCX Plug	SMA Female
Specification	CECC 22220	MIL-STD-348
Impedance	50 Ohms	50 Ohms
Contact Material and Plating	Brass, Gold	Gold
Contact Plating Specification	30 µin minimum	MIL-G-45204
Dielectric Type	PTFE	PTFE
Body Material and Plating	Brass, Nickel	Brass, Nickel
Body Plating Specification	100 µin minimum	QQ-N-290

Environmental Specifications

Temperature

Operating Range -40 to +85 deg C

Compliance Certifications (see product page for current document)

Plotted and Other Data

Notes:

Click the following link (or enter part number in “SEARCH” on website) to obtain additional part information including price, inventory and certifications: MCX Plug to SMA Female Cable 200 cm Length Using ET-LMR-100 Coax , LF Solder ET3W-08203LF-200CM

8th Floor, Building 1, Yongfu Science and Technology Center Industrial Park,
Nanzha District 5, Humen,523900, Dongguan, Guangdong, China.

Webstie:www.ebeestock.com Email:sales@ebeestock.com

© 2022 Ebeestock Enterprises All Rights Reserved

MCX Plug to SMA Female Cable 200 cm Length Using ET-LMR-100 Coax , LF Solder

RF Cable Assemblies Technical Data Sheet ET24945

How to Order

Part Number Configuration: **ET3W08203LF - xx uu**

- ET3W08203LF: Base Number
- xx: Length
- uu: Unit of Measure:
  - cm = Centimeters
  - <blank> = Inches

Example: ET3W08203LF-12 = 12 inches long cable
ET3W08203LF-100cm = 100 cm long cable

MCX Plug to SMA Female Cable 200 cm Length Using ET-LMR-100 Coax , LF Solder from Ebeestock Enterprises has same day shipment for domestic and International orders. Our RF, microwave and millimeter wave products maintain a 99.4% availability and are part of the broadest selection in the industry.

Click the following link (or enter part number in “SEARCH” on website) to obtain additional part information including price, inventory and certifications: MCX Plug to SMA Female Cable 200 cm Length Using ET-LMR-100 Coax , LF Solder ET24945

URL: https://www.ebeestock.com/mcx-plug-to-sma-female-cable-12-inch-length-using-lmr-100-coax-lf-solder-0024937

The information contained in this document is accurate to the best of our knowledge and representative of the part described herein. It may be necessary to make modifications to the part and/or the documentation of the part, in order to implement improvements. Ebeestock reserves the right to make such changes as required. Unless otherwise stated, all specifications are nominal. Ebeestock does not make any representation or warranty regarding the suitability of the part described herein for any particular purpose, and Ebeestock does not assume any liability arising out of the use of any part or documentation.

8th Floor, Building 1, Yongfu Science and Technology Center Industrial Park,
Nanzha District 5, Humen,523900, Dongguan, Guangdong, China.

Webstie:www.ebeestock.com Email:sales@ebeestock.com

© 2022 Ebeestock Enterprises All Rights Reserved

© 2022 Ebeestock Enterprises All Rights Reserved

www.ebeestock.com

REVISIONS			
REV.	DESCRIPTION	DATE	APPROVED
A	INITIAL RELEASE	8/20/2020	S.ELLIS

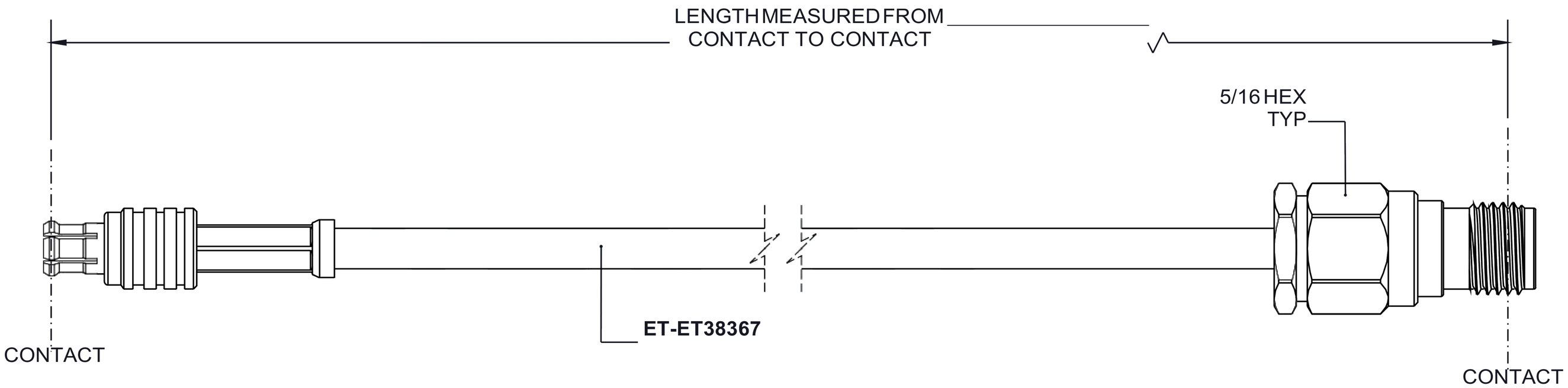

MCX PLUG

SMA FEMALE

UNLESS OTHERWISE SPECIFIED
LEADING DIMENSIONS ARE INCHES
DIMENSIONS IN [ ] ARE MILLIMETERS

TOLERANCES:

.X = ±.2 [5.08] FRACTIONS
.XX = ± .02 [.51] ± 1/32
.XXX = ±.005 [.13] ANGLES ± 1°

CABLE LENGTH (L) TOLERANCES:

L ≤ 12 [305] = +1 [25] / -0
12 [305] < L ≤ 60 [1524] = +2 [51] / -0
60 [1524] < L ≤ 120 [3048] = +4 [102] / -0
120 [3048] < L ≤ 300 [7620] = +6 [152] / -0
300 [7620] < L = +5%L / -0

ALL DIMENSIONS SHOWN
ARE FOR REFERENCE ONLY.

ebeestock
Ebeestock.com
8th Floor, Building 1, Yongfu Science
and Technology Center Industrial Park,
Nanzha District 5, Humen,523900, Dongguan, Guangdong, China.
Webstie: www.ebeestock.com **Email:** sales@ebeestock.com

THIRD-ANGLE PROJECTION

THE INFORMATION AND
DESIGN IN THIS DOCUMENT
IS THE PROPERTY OF
Ebeestock CORPORATION ALL
RIGHTS RESERVED.

SHEET 1 OF 1

SCALE N/A

SIZE	CAGE CODE	DRAWN BY	ITEM NO.	REV
A	53919	K.DANG	ET3W08203LF	A

THESE COMMODITIES, TECHNOLOGY OR SOFTWARE WERE EXPORTED FROM THE UNITED STATES IN ACCORDANCE
WITH THE EXPORT ADMINISTRATION REGULATIONS. DIVERSION CONTRARY TO U.S. LAW PROHIBITED.