MHV Male to MHV Male Cable 36 Inch Length Using ET-RG400 Coa

x

RF Cable Assemblies Technical Data Sheet ET25121

Configuration

- Connector 1: MHV Male
- Connector 2: MHV Male
- Cable Type: ET-RG400

Features

- Max Frequency 300 MHz
- 69.5% Phase Velocity
- Double Shielded
- FEP Jacket

Applications

- General Purpose
- Laboratory Use

Description

Ebeestock's ET25121 MHV male to MHV male 36 inch cable using ET-RG400 coax is part of our full line of RF components available for same-day shipping. Ebeestock's flexible RF cable assemblies are ideal for applications where tight bends and flexure are required. This Ebeestock MHV to MHV cable assembly has a male to male gender configuration with 50 ohm flexible ET-RG400 coax. The ET25121 MHV male to MHV male cable assembly operates to 300 MHz. The double shielding of this Ebeestock cable assembly provides excellent shielding effectiveness.

Custom versions of most RF cable assemblies can be built and shipped same day. Custom cable assembly lengths can be obtained by specifying the desired length on the web site at time of order or by contacting a sales representative. Other available RF cable assembly value added services include connector orientation or clocking, heat shrink booting and custom labeling. RF testing can also be performed to document the electrical performance of your cable assembly.

Electrical Specifications

Description	Minimum	Typical	Maximum	Units
Frequency Range	DC		300	MHz
Velocity of Propagation		69.5		%
Capacitance		32 [104.99]		pF/ft [pF/m]

Specifications by Frequency

Description	F1	F2	F3	F4	F5	Units
Frequency	100	300				MHz
Insertion Loss (Typ.)	0.34	0.43				dB

Click the following link (or enter part number in "SEARCH" on website) to obtain additional part information including price, inventory and certifications: MHV Male to MHV Male Cable 36 Inch Length Using ET-RG400 Coax ET25121

8th Floor, Building 1, Yongfu Science and Technology Center Industrial Park,
Nanzha District 5, Humen,523900, Dongguan, Guangdong, China.

Webstie:www.ebeestock.com Email:sales@ebeestock.com

© 2022 Ebeestock Enterprises All Rights Reserved

MHV Male to MHV Male Cable 36 Inch Length Using ET-RG400 Coa

x

RF Cable Assemblies Technical Data Sheet ET25121

Mechanical Specifications

Cable Assembly

Length*	36 in [914.4 mm]
Weight	0.209 lbs [94.8 g]

Cable

Cable Type	ET-RG400
Impedance	50 Ohms
Inner Conductor Type	Stranded
Inner Conductor Material and Plating	Copper, Silver
Dielectric Type	PTFE
Number of Shields	2
Shield Layer 1	Silver Plated Copper Braid
Shield Layer 2	Silver Plated Copper Braid
Jacket Material	FEP, Tan
Jacket Diameter	0.195 in [4.95 mm]
One Time Minimum Bend Radius	1 in [25.4 mm]

Connectors

Description	Connector 1	Connector 2
Type	MHV Male	MHV Male
Impedance	50 Ohms	50 Ohms
Body Material and Plating	Brass, Nickel	Brass, Nickel

Compliance Certifications (see product page for current document)

Plotted and Other Data

Notes:

- Values at 25°C, sea level.

Click the following link (or enter part number in “SEARCH” on website) to obtain additional part information including price, inventory and certifications: MHV Male to MHV Male Cable 36 Inch Length Using ET-RG400 Coax ET25121

8th Floor, Building 1, Yongfu Science and Technology Center Industrial Park,
Nanzha District 5, Humen,523900, Dongguan, Guangdong, China.

Webstie:www.ebeestock.com Email:sales@ebeestock.com

© 2022 Ebeestock Enterprises All Rights Reserved

MHV Male to MHV Male Cable 36 Inch Length Using ET-RG400 Coa

x

RF Cable Assemblies Technical Data Sheet ET25121

How to Order

Part Number Configuration: **ET34425 - xx uu**

- ET34425 — Base Number
- xx — Length
- uu — Unit of Measure:
  - cm = Centimeters
  - <blank> = Inches

Example: ET34425-12 = 12 inches long cable
ET34425-100cm = 100 cm long cable

MHV Male to MHV Male Cable 36 Inch Length Using ET-RG400 Coax from Ebeestock Enterprises has same day shipment for domestic and International orders. Our RF, microwave and millimeter wave products maintain a 99.4% availability and are part of the broadest selection in the industry.

Click the following link (or enter part number in “SEARCH” on website) to obtain additional part information including price, inventory and certifications: MHV Male to MHV Male Cable 36 Inch Length Using ET-RG400 Coax ET25121

URL: https://www.ebeestock.com/mhv-male-to-mhv-male-cable-12-inch-length-using-rg400-coax-0025119

The information contained in this document is accurate to the best of our knowledge and representative of the part described herein. It may be necessary to make modifications to the part and/or the documentation of the part, in order to implement improvements. Ebeestock reserves the right to make such changes as required. Unless otherwise stated, all specifications are nominal. Ebeestock does not make any representation or warranty regarding the suitability of the part described herein for any particular purpose, and Ebeestock does not assume any liability arising out of the use of any part or documentation.

8th Floor, Building 1, Yongfu Science and Technology Center Industrial Park,
Nanzha District 5, Humen,523900, Dongguan, Guangdong, China.

Webstie:www.ebeestock.com Email:sales@ebeestock.com

© 2022 Ebeestock Enterprises All Rights Reserved

© 2022 Ebeestock Enterprises All Rights Reserved

www.ebeestock.com

REVISIONS			
REV.	DESCRIPTION	DATE	APPROVED
B	PCR ET34425	1/19/2022	A. GANWANI

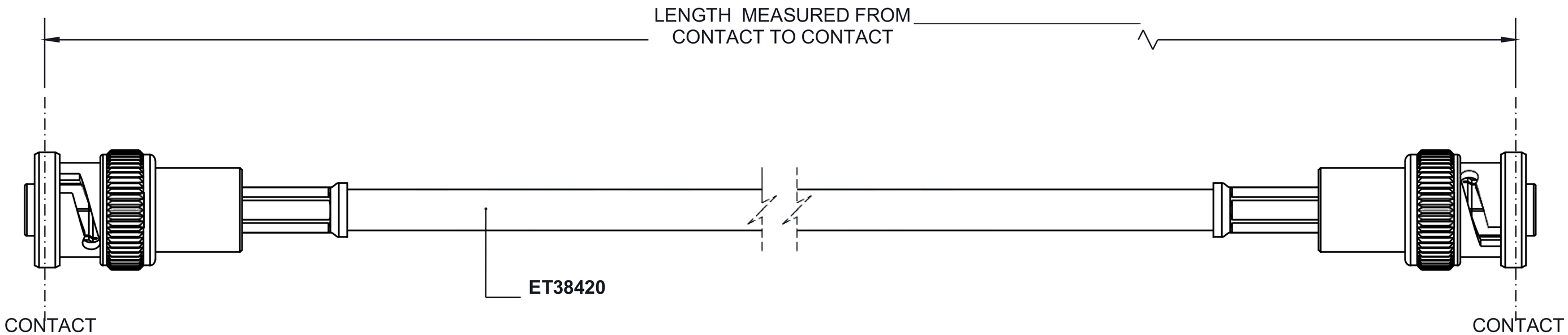

MHV MALE

MHV MALE

UNLESS OTHERWISE SPECIFIED
LEADING DIMENSIONS ARE INCHES
DIMENSIONS IN [ ] ARE MILLIMETERS

TOLERANCES:

.X = ±.2	[5.08]	FRACTIONS
.XX = ± .02	[.51]	± 1/32
.XXX = ±.005	[.13]	ANGLES ± 1°

CABLE LENGTH (L) TOLERANCES:

L ≤ 12 [305] = +1 [25] / -0
12 [305] < L ≤ 60 [1524] = +2 [51] / -0
60 [1524] < L ≤ 120 [3048] = +4 [102] / -0
120 [3048] < L ≤ 300 [7620] = +6 [152] / -0
300 [7620] < L = +5%L / -0

ALL DIMENSIONS SHOWN
ARE FOR REFERENCE ONLY.

ebeestock
Ebeestock.com
8th Floor, Building 1, Yongfu Science
and Technology Center Industrial Park,
Nanzha District 5, Humen,523900, Dongguan, Guangdong, China.
Webstie: www.ebeestock.com **Email:** sales@ebeestock.com

THIRD-ANGLE PROJECTION

THE INFORMATION AND
DESIGN IN THIS DOCUMENT
IS THE PROPERTY OF
Ebeestock CORPORATION ALL
RIGHTS RESERVED.

SHEET 1 OF 1

SCALE N/A

SIZE	CAGE CODE	DRAWN BY	ITEM NO.	REV
A	53919	K.DANG	ET34425	B

THESE COMMODITIES, TECHNOLOGY OR SOFTWARE WERE EXPORTED FROM THE UNITED STATES IN ACCORDANCE
WITH THE EXPORT ADMINISTRATION REGULATIONS. DIVERSION CONTRARY TO U.S. LAW PROHIBITED.

T-Rev.D