MHV Female to MHV Male Cable Using 75 Ohm ET-RG59 Coax In 50 CM Length

RF Cable Assemblies Technical Data Sheet ET25300

Configuration

- Connector 1: MHV Female
- Connector 2: MHV Male
- Cable Type: ET-RG59

Features

- Max Frequency 300 MHz
- 66% Phase Velocity
- PVC (NC) Jacket

Applications

- General Purpose
- Laboratory Use

Description

Ebeestock's ET25300 MHV female to MHV male 50 cm cable using 75 ohm ET-RG59 coax is part of our full line of RF components available for same-day shipping. Ebeestock's flexible RF cable assemblies are ideal for applications where tight bends and flexure are required. This Ebeestock MHV to MHV cable assembly has a female to male gender configuration with 75 ohm flexible ET-RG59 coax. The ET25300 MHV female to MHV male cable assembly operates to 300 MHz.

Custom versions of most RF cable assemblies can be built and shipped same day. Custom cable assembly lengths can be obtained by specifying the desired length on the web site at time of order or by contacting a sales representative. Other available RF cable assembly value added services include connector orientation or clocking, heat shrink booting and custom labeling. RF testing can also be performed to document the electrical performance of your cable assembly.

Electrical Specifications

Description	Minimum	Typical	Maximum	Units
Frequency Range	DC		300	MHz
Velocity of Propagation		66		%
Capacitance		20.4 [66.93]		pF/ft [pF/m]
Operating Voltage (AC)			1,600	Vrms

Specifications by Frequency

Description	F1	F2	F3	F4	F5	Units
Frequency	250	300				MHz
Insertion Loss (Typ.)	0.2	0.22				dB

Electrical Specification Notes:

Click the following link (or enter part number in "SEARCH" on website) to obtain additional part information including price, inventory and certifications: MHV Female to MHV Male Cable Using 75 Ohm ET-RG59 Coax In 50 CM Length ET25300

8th Floor, Building 1, Yongfu Science and Technology Center Industrial Park,
Nanzha District 5, Humen,523900, Dongguan, Guangdong, China.

Webstie:www.ebeestock.com Email:sales@ebeestock.com

© 2022 Ebeestock Enterprises All Rights Reserved

RF Cable Assemblies Technical Data Sheet ET25300

The Insertion Loss data above is based on the performance specifications of the coax and connectors used in this assembly. The Insertion Loss includes an estimated insertion loss of 0.1*SQRT(FGHz) dB per connector.

Mechanical Specifications

Cable Assembly

Length*	19.68 in [499.87 mm]
Weight	0.111 lbs [50.35 g]

Cable

Cable Type	ET-RG59
Impedance	75 Ohms
Inner Conductor Type	Solid
Inner Conductor Material and Plating	Copper Clad Steel
Dielectric Type	PE
Number of Shields	1
Shield Layer 1	Copper Braid
Jacket Material	PVC (NC), Black
Jacket Diameter	0.242 in [6.15 mm]

Connectors

Description	Connector 1	Connector 2
Type	MHV Female	MHV Male
Specification	MIL-C-39012	MIL-STD-348A
Impedance	50 Ohms	50 Ohms
Contact Material and Plating	Silver	Brass, Gold
Contact Plating Specification	QQ-S-365	30 µin minimum
Dielectric Type	Teflon	PTFE
Body Material and Plating	Brass, Nickel	Brass, Nickel
Body Plating Specification		100 µin minimum
Coupling Nut Material and Plating		Brass, Nickel
Coupling Nut Plating Specification		100 µin minimum

Environmental Specifications

Temperature

Operating Range	-40 to +80 deg C

Click the following link (or enter part number in “SEARCH” on website) to obtain additional part information including price, inventory and certifications: MHV Female to MHV Male Cable Using 75 Ohm ET-RG59 Coax In 50 CM Length ET25300

8th Floor, Building 1, Yongfu Science and Technology Center Industrial Park,
Nanzha District 5, Humen,523900, Dongguan, Guangdong, China.

Webstie:www.ebeestock.com Email:sales@ebeestock.com

© 2022 Ebeestock Enterprises All Rights Reserved

MHV Female to MHV Male Cable Using 75 Ohm ET-RG59 Coax In 50 CM Length

RF Cable Assemblies Technical Data Sheet ET25300

Compliance Certifications (see product page for current document)

Plotted and Other Data

Notes:

How to Order

Part Number Configuration: **ET34324 - xx uu**

- uu — Unit of Measure: cm = Centimeters; <blank> = Inches
- xx — Length
- ET34324 — Base Number

Example: ET34324-12 = 12 inches long cable
ET34324-100cm = 100 cm long cable

MHV Female to MHV Male Cable Using 75 Ohm ET-RG59 Coax In 50 CM Length from Ebeestock Enterprises has same day shipment for domestic and International orders. Our RF, microwave and millimeter wave products maintain a 99.4% availability and are part of the broadest selection in the industry.

Click the following link (or enter part number in “SEARCH” on website) to obtain additional part information including price, inventory and certifications: MHV Female to MHV Male Cable Using 75 Ohm ET-RG59 Coax In 50 CM Length ET25300

URL: https://www.ebeestock.com/mhv-female-to-mhv-male-cable-using-75-ohm-rg59-coax-in-12-inch-length-0025295

The information contained in this document is accurate to the best of our knowledge and representative of the part described herein. It may be necessary to make modifications to the part and/or the documentation of the part, in order to implement improvements. Ebeestock reserves the right to make such changes as required. Unless otherwise stated, all specifications are nominal. Ebeestock does not make any representation or warranty regarding the suitability of the part described herein for any particular purpose, and Ebeestock does not assume any liability arising out of the use of any part or documentation.

8th Floor, Building 1, Yongfu Science and Technology Center Industrial Park,
Nanzha District 5, Humen,523900, Dongguan, Guangdong, China.

Webstie:www.ebeestock.com Email:sales@ebeestock.com

© 2022 Ebeestock Enterprises All Rights Reserved

© 2022 Ebeestock Enterprises All Rights Reserved

www.ebeestock.com

REVISIONS			
REV.	DESCRIPTION	DATE	APPROVED
A	INITIAL RELEASE	11/10/2021	A. GANWANI

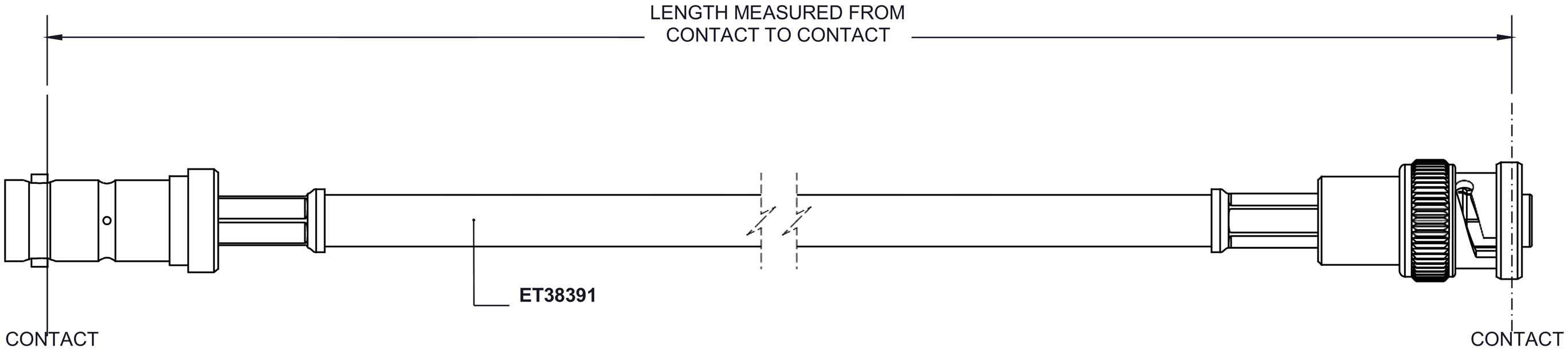

MHV FEMALE

MHV MALE

THESE COMMODITIES, TECHNOLOGY OR SOFTWARE WERE EXPORTED FROM THE UNITED STATES IN ACCORDANCE WITH THE EXPORT ADMINISTRATION REGULATIONS. DIVERSION CONTRARY TO U.S. LAW PROHIBITED.

UNLESS OTHERWISE SPECIFIED
LEADING DIMENSIONS ARE INCHES
DIMENSIONS IN [ ] ARE MILLIMETERS

TOLERANCES:

.X = ±.2 [5.08]
.XX = ± .02 [.51]
.XXX = ±.005 [.13]

FRACTIONS ± 1/32
ANGLES ± 1°

CABLE LENGTH (L) TOLERANCES:

L ≤ 12 [305] = +1 [25] / -0
12 [305] < L ≤ 60 [1524] = +2 [51] / -0
60 [1524] < L ≤ 120 [3048] = +4 [102] / -0
120 [3048] < L ≤ 300 [7620] = +6 [152] / -0
300 [7620] < L = +5%L / -0

ALL DIMENSIONS SHOWN ARE FOR REFERENCE ONLY.

ebeestock
Ebeestock.com
8th Floor, Building 1, Yongfu Science and Technology Center Industrial Park,
Nanzha District 5, Humen,523900, Dongguan, Guangdong, China.
Webstie: www.ebeestock.com **Email:** sales@ebeestock.com

THIRD-ANGLE PROJECTION

THE INFORMATION AND DESIGN IN THIS DOCUMENT IS THE PROPERTY OF Ebeestock CORPORATION ALL RIGHTS RESERVED.

SHEET 1 OF 1

SCALE N/A

SIZE	CAGE CODE	DRAWN BY	ITEM NO.	REV
A	53919	K.DANG	ET34324	A

T-Rev.D