Snap-On MMBX Plug to SMA Female Bulkhead Cable 4 Inch Length Using ET38399 Coax

RF Cable Assemblies Technical Data Sheet ET25974

Configuration

- Connector 1: Snap-On MMBX Plug
- Connector 2: SMA Female Bulkhead
- Cable Type: ET38399

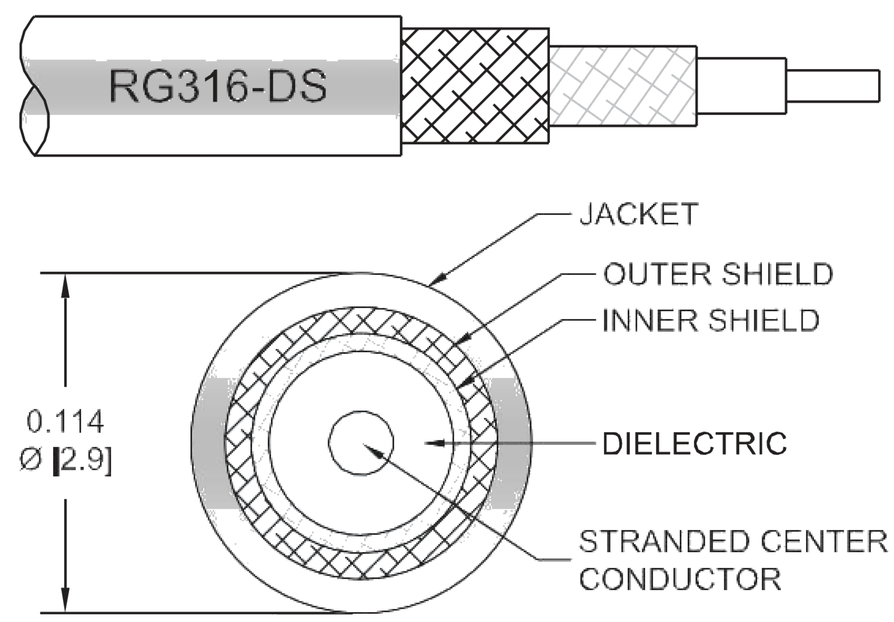

Features

- Max. Operating Frequency of 3 GHz
- Snap-On mating
- Low Profile Right Angle Configurations
- SMA Bulkhead, N Bulkhead and TNC Bulkhead Between-Series Configurations

Applications

- General Purpose Test
- PCB Probing
- PCB Testing
- PCB-to-Panel

Description

Ebeestock's MMBX cable assemblies are part of our full line of RF components available for same-day shipping. These MMBX cable assemblies are designed to connect MMBX system components or test connections, delivering signal frequencies as high as 3 GHz. Our family of MMBX cables can also be used to connect from PCB to panel, offering between series MMBX options with SMA Bulkhead, TNC Bulkhead and N Bulkhead assembly configurations. If none of our standard options fit your application, you can specify your own custom MMBX cable assembly using Ebeestock's online Cable Creator.

Our MMBX cable assembly datasheet specifications and drawing with dimensions are shown below in this PDF. Ebeestock's broad catalog of RF, microwave and millimeter wave cable assemblies allow designers to configure and customize their signal connections however they like. Whether the need is to provide an I/O for a board design, or simply create a custom cable assembly configuration, Ebeestock has the right cable assemblies for the job. Ebeestock can also expertly build your custom cable assemblies for you and ship same day.

Electrical Specifications

Description	Minimum	Typical	Maximum	Units
Frequency Range	DC		3	GHz
VSWR			1.4:1	
Return Loss		-15.56		dB
Insertion Loss			0.36	dB
Velocity of Propagation		70		%
Capacitance		29.4 [96.46]		pF/ft [pF/m]

Click the following link (or enter part number in "SEARCH" on website) to obtain additional part information including price, inventory and certifications: Snap-On MMBX Plug to SMA Female Bulkhead Cable 4 Inch Length Using ET38399 Coax ET25974

8th Floor, Building 1, Yongfu Science and Technology Center Industrial Park,
Nanzha District 5, Humen,523900, Dongguan, Guangdong, China.

Webstie:www.ebeestock.com Email:sales@ebeestock.com

© 2022 Ebeestock Enterprises All Rights Reserved

Snap-On MMBX Plug to SMA Female Bulkhead Cable 4 Inch Length Using ET38399 Coax

RF Cable Assemblies Technical Data Sheet ET25974

Specifications by Frequency

Description	F1	F2	F3	F4	F5	Units
Frequency	0.1	0.25	0.5	1	3	GHz
Insertion Loss (Max.)	0.23	0.25	0.27	0.29	0.36	dB

Mechanical Specifications

Cable Assembly

Length*	4 in [101.6 mm]

Cable

Cable Type	ET38399
Impedance	50 Ohms
Inner Conductor Type	Stranded
Inner Conductor Material and Plating	Copper Clad Steel, Silver
Dielectric Type	PTFE
Number of Shields	2
Shield Layer 1	Silver Plated Copper Braid
Shield Layer 2	Silver Plated Copper Braid
Jacket Material	FEP, Tan
Jacket Diameter	0.114 in [2.9 mm]
Repeated Minimum Bend Radius	0.6 in [15.24 mm]

Connectors

Description	Connector 1	Connector 2
Type	MMBX Plug	SMA Female Bulkhead
Impedance	50 Ohms	50 Ohms
Connection Method	Snap-On	
Mating Cycles	100	
Contact Material and Plating	Beryllium Copper, Gold	Gold
Dielectric Type	PTFE	
Outer Conductor Material and Plating	Brass, Gold	
Body Material and Plating	Brass, Gold	Brass, Nickel

Mechanical Specification Notes:
*All cable assemblies have a length tolerance of 1.5% or ± 3/8", whichever is greater.

Click the following link (or enter part number in "SEARCH" on website) to obtain additional part information including price, inventory and certifications: Snap-On MMBX Plug to SMA Female Bulkhead Cable 4 Inch Length Using ET38399 Coax ET25974

8th Floor, Building 1, Yongfu Science and Technology Center Industrial Park,
Nanzha District 5, Humen,523900, Dongguan, Guangdong, China.

Webstie:www.ebeestock.com Email:sales@ebeestock.com

© 2022 Ebeestock Enterprises All Rights Reserved

Snap-On MMBX Plug to SMA Female Bulkhead Cable 4 Inch Length Using ET38399 Coax

RF Cable Assemblies Technical Data Sheet ET25974

Environmental Specifications

Temperature

Operating Range	-55 to +155 deg C

Compliance Certifications (see product page for current document)

Plotted and Other Data

Notes:

How to Order

Part Number Configuration:

ET3C4051 - xx uu

- uu: Unit of Measure:
  - cm = Centimeters
  - <blank> = Inches
- xx: Length
- ET3C4051: Base Number

Example: ET3C4051-12 = 12 inches long cable
ET3C4051-100cm = 100 cm long cable

Snap-On MMBX Plug to SMA Female Bulkhead Cable 4 Inch Length Using ET38399 Coax from Ebeestock Enterprises has same day shipment for domestic and International orders. Our RF, microwave and millimeter wave products maintain a 99.4% availability and are part of the broadest selection in the industry.

Click the following link (or enter part number in “SEARCH” on website) to obtain additional part information including price, inventory and certifications: Snap-On MMBX Plug to SMA Female Bulkhead Cable 4 Inch Length Using ET38399 Coax ET25974

URL: https://www.ebeestock.com/snap-on-mmbx-plug-to-sma-female-bulkhead-cable-4-inch-length-using-rg316-ds-coax-0025974

The information contained in this document is accurate to the best of our knowledge and representative of the part described herein. It may be necessary to make modifications to the part and/or the documentation of the part, in order to implement improvements. Ebeestock reserves the right to make such changes as required. Unless otherwise stated, all specifications are nominal. Ebeestock does not make any representation or warranty regarding the suitability of the part described herein for any particular purpose, and Ebeestock does not assume any liability arising out of the use of any part or documentation.

8th Floor, Building 1, Yongfu Science and Technology Center Industrial Park,
Nanzha District 5, Humen,523900, Dongguan, Guangdong, China.

Webstie:www.ebeestock.com Email:sales@ebeestock.com

© 2022 Ebeestock Enterprises All Rights Reserved

© 2022 Ebeestock Enterprises All Rights Reserved

www.ebeestock.com

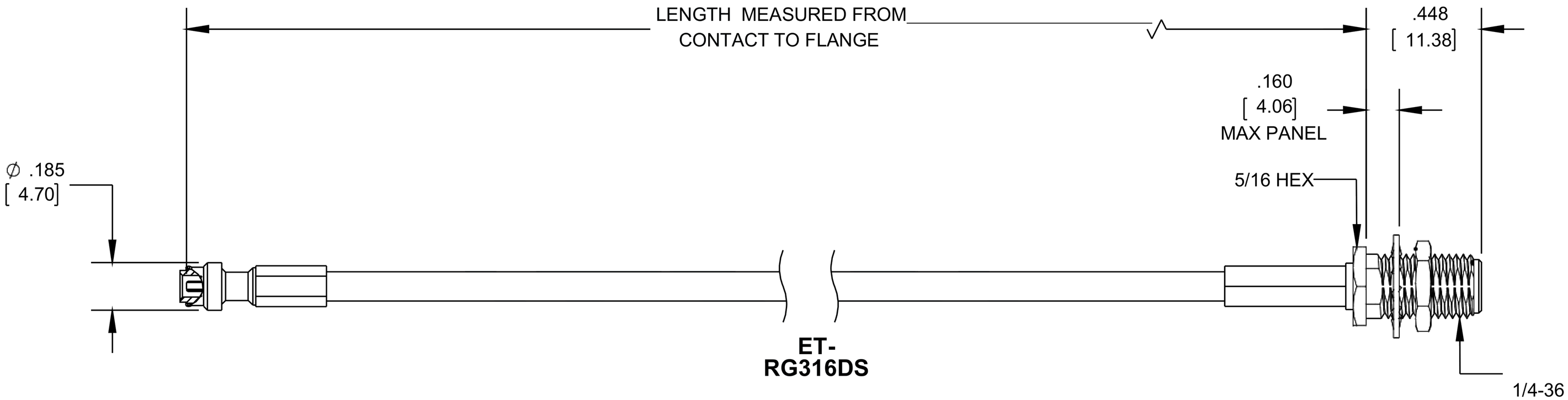

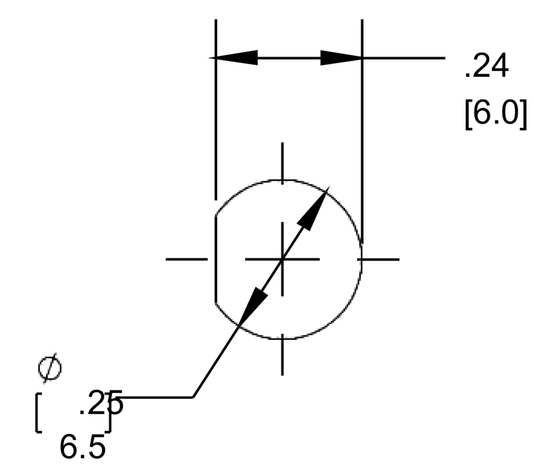

MOUNTING HOLE

STANDARD TOLERANCES	
.X	±0.2
.XX	±0.01
.XXX	±0.005

*STANDARD TOLERANCES APPLY ONLY TO DIMENSIONS IN INCHES

PASTERNACK®
THE ENGINEER'S RF SOURCE
8th Floor, Building 1, Yongfu Science and Technology Center Industrial Park
P.O. Box 16759 | Irvine | CA | 92623
Phone: (949) 261-1920 | **Fax:** (949) 261-7451

DWG TITLE

ET3C4051

CAGE CODE 53919

NOTES:
1. UNLESS OTHERWISE SPECIFIED ALL DIMENSIONS ARE NOMINAL.
2. ALL SPECIFICATIONS ARE SUBJECT TO CHANGE WITHOUT NOTICE AT ANY TIME
3. DIMENSIONS ARE IN INCHES [mm].

CAD FILE	052317	SCALE N/A	SIZE A	9999

Website: | E-Mail: sales@Ebeestock.com

© 2022 Ebeestock Enterprises All Rights Reserved