Snap-On MMBX Plug Right Angle to Snap-On MMBX Plug Right Ang le Cable 4 Inch Length Using ET38322J Coax

RF Cable Assemblies Technical Data Sheet ET26052

Configuration

- Connector 1: Snap-On MMBX Plug Right Angle
- Connector 2: Snap-On MMBX Plug Right Angle
- Cable Type: ET38323

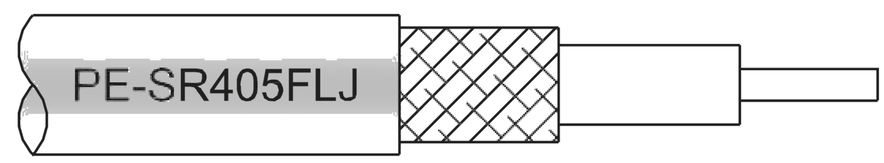

Features

- Max. Operating Frequency of 12.4 GHz
- Snap-On mating
- Low Profile Right Angle Configurations
- SMA Bulkhead, N Bulkhead and TNC Bulkhead Between-Series Configurations

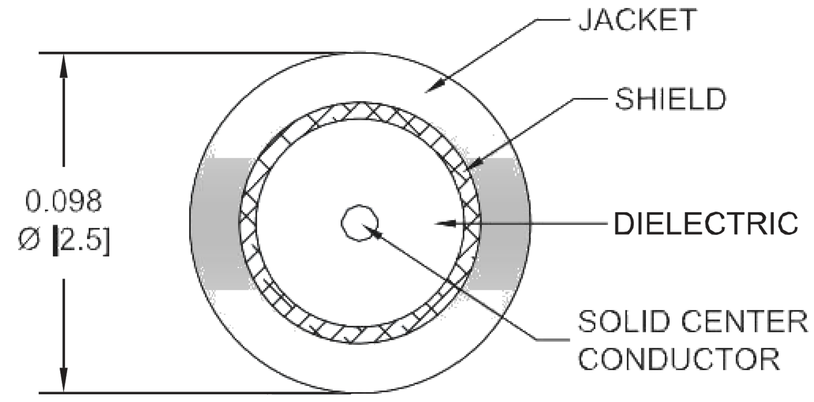

Applications

- General Purpose Test
- PCB Probing
- PCB Testing
- PCB-to-Panel

Description

Ebeestock's MMBX cable assemblies are part of our full line of RF components available for same-day shipping. These MMBX cable assemblies are designed to connect MMBX system components or test connections, delivering signal frequencies as high as 12.4 GHz. Our family of MMBX cables can also be used to connect from PCB to panel, offering between series MMBX options with SMA Bulkhead, TNC Bulkhead and N Bulkhead assembly configurations. If none of our standard options fit your application, you can specify your own custom MMBX cable assembly using Ebeestock's online Cable Creator.

Our MMBX cable assembly datasheet specifications and drawing with dimensions are shown below in this PDF. Ebeestock's broad catalog of RF, microwave and millimeter wave cable assemblies allow designers to configure and customize their signal connections however they like. Whether the need is to provide an I/O for a board design, or simply create a custom cable assembly configuration, Ebeestock has the right cable assemblies for the job. Ebeestock can also expertly build your custom cable assemblies for you and ship same day.

Electrical Specifications

Description	Minimum	Typical	Maximum	Units
Frequency Range	DC		12.4	GHz
VSWR			1.4:1	
Return Loss			-15.56	dB
Velocity of Propagation		69.5		%
RF Shielding	100			dB
Group Delay		1.43 [4.69]		ns/ft [ns/m]
Capacitance		29 [95.14]		pF/ft [pF/m]

Click the following link (or enter part number in "SEARCH" on website) to obtain additional part information including price, inventory and certifications: Snap-On MMBX Plug Right Angle to Snap-On MMBX Plug Right Angle Cable 4 Inch Length Using ET38323 Coax ET26052

8th Floor, Building 1, Yongfu Science and Technology Center Industrial Park,
Nanzha District 5, Humen,523900, Dongguan, Guangdong, China.

Webstie:www.ebeestock.com Email:sales@ebeestock.com

© 2022 Ebeestock Enterprises All Rights Reserved

Snap-On MMBX Plug Right Angle to Snap-On MMBX Plug Right Ang le Cable 4 Inch Length Using ET38322J Coax

RF Cable Assemblies Technical Data Sheet ET26052

Specifications by Frequency

Description	F1	F2	F3	F4	F5	Units
Frequency	0.5	1	2.5	5	12.4	GHz
Insertion Loss (Max.)	0.25	0.27	0.3	0.36	0.46	dB

Mechanical Specifications

Cable Assembly

Length*	4 in [101.6 mm]
Diameter	0.24 in [6.1 mm]

Cable

Cable Type	ET38323
Impedance	50 Ohms
Inner Conductor Type	Solid
Inner Conductor Material and Plating	Copper Clad Steel, Silver
Dielectric Type	PTFE
Number of Shields	1
Shield Layer 1	Tinned Copper Braid
Outer Conductor Material and Plating	Tinned Copper Composite Braid
Jacket Material	FEP, Black
Jacket Diameter	0.098 in [2.49 mm]
One Time Minimum Bend Radius	0.236 in [5.99 mm]
Repeated Minimum Bend Radius	0.787 in [19.99 mm]

Connectors

Description	Connector 1	Connector 2
Type	MMBX Plug Right Angle	MMBX Plug Right Angle
Impedance	50 Ohms	50 Ohms
Connection Method	Snap-On	Snap-On
Mating Cycles	100	100
Contact Material and Plating	Beryllium Copper, Gold	Beryllium Copper, Gold
Dielectric Type	PTFE	PTFE
Outer Conductor Material and Plating	Brass, Gold	Brass, Gold
Body Material and Plating	Brass, Gold	Brass, Gold

Click the following link (or enter part number in “SEARCH” on website) to obtain additional part information including price, inventory and certifications: Snap-On MMBX Plug Right Angle to Snap-On MMBX Plug Right Angle Cable 4 Inch Length Using ET38323 Coax ET26052

8th Floor, Building 1, Yongfu Science and Technology Center Industrial Park,
Nanzha District 5, Humen,523900, Dongguan, Guangdong, China.

Webstie:www.ebeestock.com Email:sales@ebeestock.com

© 2022 Ebeestock Enterprises All Rights Reserved

Snap-On MMBX Plug Right Angle to Snap-On MMBX Plug Right Ang le Cable 4 Inch Length Using ET38322J Coax

RF Cable Assemblies Technical Data Sheet ET26052

Mechanical Specification Notes:
*All cable assemblies have a length tolerance of 1.5% or ± 3/8”, whichever is greater.

Environmental Specifications

Temperature

Operating Range	-55 to +125 deg C

Compliance Certifications (see product page for current document)

Plotted and Other Data

Notes:

How to Order

Part Number Configuration: **ET3C4065 - xx uu**

- uu — Unit of Measure:
  - cm = Centimeters
  - <blank> = Inches
- xx — Length
- ET3C4065 — Base Number

Example: ET3C4065-12 = 12 inches long cable
ET3C4065-100cm = 100 cm long cable

Snap-On MMBX Plug Right Angle to Snap-On MMBX Plug Right Angle Cable 4 Inch Length Using ET38323 Coax from Ebeestock Enterprises has same day shipment for domestic and International orders. Our RF, microwave and millimeter wave products maintain a 99.4% availability and are part of the broadest selection in the industry.

Click the following link (or enter part number in “SEARCH” on website) to obtain additional part information including price, inventory and certifications: Snap-On MMBX Plug Right Angle to Snap-On MMBX Plug Right Angle Cable 4 Inch Length Using ET38323 Coax ET26052

URL: https://www.ebeestock.com/snap-on-mmbx-plug-right-angle-to-snap-on-mmbx-plug-right-angle-cable-4-inch-length-using-pe-sr405flj-coax-0026052

The information contained in this document is accurate to the best of our knowledge and representative of the part described herein. It may be necessary to make modifications to the part and/or the documentation of the part, in order to implement improvements. Ebeestock reserves the right to make such changes as required. Unless otherwise stated, all specifications are nominal. Ebeestock does not make any representation or warranty regarding the suitability of the part described herein for any particular purpose, and Ebeestock does not assume any liability arising out of the use of any part or documentation.

8th Floor, Building 1, Yongfu Science and Technology Center Industrial Park,
Nanzha District 5, Humen,523900, Dongguan, Guangdong, China.

Webstie:www.ebeestock.com Email:sales@ebeestock.com

© 2022 Ebeestock Enterprises All Rights Reserved

© 2022 Ebeestock Enterprises All Rights Reserved

www.ebeestock.com

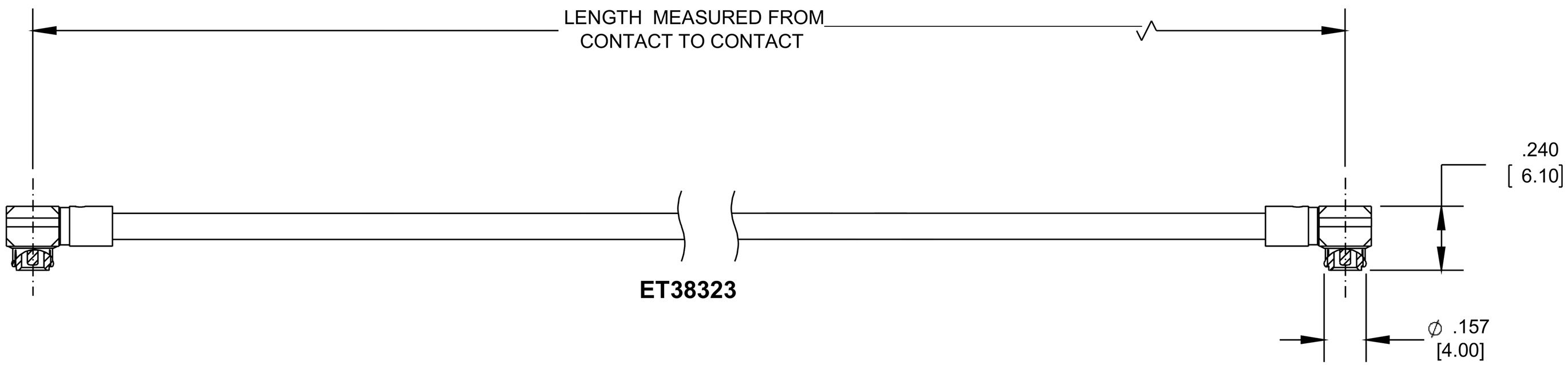

MMBX PLUG
RIGHT ANGLE

MMBX PLUG
RIGHT ANGLE

STANDARD TOLERANCES	
.X	±0.2
.XX	±0.01
.XXX	±0.005

*STANDARD TOLERANCES APPLY ONLY TO DIMENSIONS IN INCHES

ebeestock
Ebeestock.com
8th Floor, Building 1, Yongfu Science
and Technology Center Industrial Park,
Nanzha District 5, Humen,523900, Dongguan, Guangdong, China.
Webstie: www.ebeestock.com **Email:** sales@ebeestock.com

DWG TITLE

ET3C4065

NOTES:
1. UNLESS OTHERWISE SPECIFIED ALL DIMENSIONS ARE NOMINAL.
2. ALL SPECIFICATIONS ARE SUBJECT TO CHANGE WITHOUT NOTICE AT ANY TIME
3. DIMENSIONS ARE IN INCHES [mm].

CAGE CODE 53919	**CAD FILE** 052317	**SCALE N/A**	**SIZE A**	9999

© 2022 Ebeestock Enterprises All Rights Reserved