Snap-On MMBX Plug to SMA Male Cable 60 Inch Length Using ET3 8322J Coax with HeatShrink

# RF Cable Assemblies Technical Data Sheet ET26092

## Configuration

- Connector 1: Snap-OnMMBX Plug
- Connector 2: SMA Male
- Cable Type: ET38323

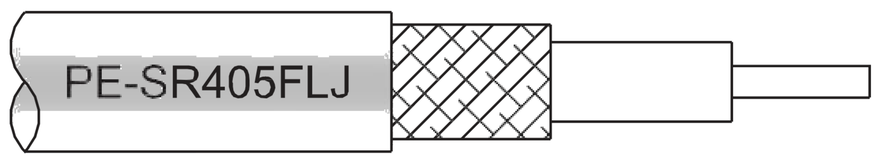


## Features

- Max Frequency 12.4 GHz
- Shielding Effectivity > 100 dB
- 69.5% Phase Velocity
- FEP Jacket

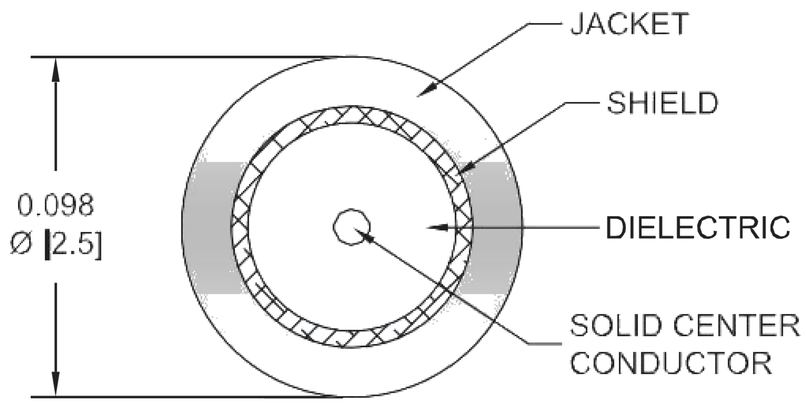


## Applications

- General Purpose
- Laboratory Use

### Description

Ebeestock's ET26092 MMBX plug snap-on to SMA male 60 inch cable using ET38323 coax is part of our full line of RF components available for same-day shipping. Ebeestock's formable RF cable assemblies provide an alternative to costly pre-formed semi-rigid assemblies since they are hand formable. This Ebeestock MMBX to SMA cable assembly has a plug to male gender configuration with 50 ohm formable ET38323 coax. The ET26092 MMBX plug to SMA male cable assembly operates to 12.4 GHz.

Custom versions of most RF cable assemblies can be built and shipped same day. Custom cable assembly lengths can be obtained by specifying the desired length on the web site at time of order or by contacting a sales representative. Other available RF cable assembly value added services include connector orientation or clocking, heat shrink booting and custom labeling. RF testing can also be performed to document the electrical performance of your cable assembly.

Click the following link (or enter part number in "SEARCH" on website) to obtain additional part information including price, inventory and certifications: Snap-On MMBX Plug to SMA Male Cable 60 Inch Length Using ET38323 Coax with HeatShrink ET26092

8th Floor, Building 1, Yongfu Science and Technology Center Industrial Park,
Nanzha District 5, Humen,523900, Dongguan, Guangdong, China.

Webstie:www.ebeestock.com Email:sales@ebeestock.com

© 2022 Ebeestock Enterprises All Rights Reserved

Snap-On MMBX Plug to SMA Male Cable 60 Inch Length Using ET3 8322J Coax with HeatShrink

# RF Cable Assemblies Technical Data Sheet ET26092

## Electrical Specifications

| Description | Minimum | Typical | Maximum | Units |
|---|---|---|---|---|
| Frequency Range | DC | | 12.4 | GHz |
| VSWR | | | 1.5:1 | |
| Velocity of Propagation | | 69.5 | | % |
| RF Shielding | 100 | | | dB |
| Group Delay | | 1.43 [4.69] | | ns/ft [ns/m] |
| Capacitance | | 29 [95.14] | | pF/ft [pF/m] |
| DC Resistance Inner Conductor | | 65.7 [215.55] | | Ohms/1000ft [Ohms/Km] |
| DC Resistance Outer Conductor | | 10.2 [33.46] | | Ohms/1000ft [Ohms/Km] |

### Specifications by Frequency

| Description | F1 | F2 | F3 | F4 | F5 | Units |
|---|---|---|---|---|---|---|
| Frequency | 1 | 2 | 4 | 8 | 12.4 | GHz |
| Insertion Loss (Max.) | 1.324 | 1.73 | 2.539 | 3.729 | 4.724 | dB |

Electrical Specification Notes:
The Insertion Loss data above is based on the performance specifications of the coax use in this assembly. The Insertion Loss includes an estimated insertion loss of 0.2dB of connector Loss

## Mechanical Specifications

### Cable Assembly

| | |
|---|---|
| Length* | 60 in [152.4 cm] |
| Diameter | 0.315 in [8 mm] |

### Cable

| | |
|---|---|
| Cable Type | ET38323 |
| Impedance | 50 Ohms |
| Inner Conductor Type | Solid |
| Inner Conductor Material and Plating | Copper Clad Steel, Silver |
| Dielectric Type | PTFE |
| Number of Shields | 1 |
| Outer Conductor Material and Plating | Tinned Copper Composite Braid |
| Jacket Material | FEP, Black |
| Jacket Diameter | 0.105 in [2.67 mm] |

Click the following link (or enter part number in “SEARCH” on website) to obtain additional part information including price, inventory and certifications: Snap-On MMBX Plug to SMA Male Cable 60 Inch Length Using ET38323 Coax with HeatShrink ET26092

8th Floor, Building 1, Yongfu Science and Technology Center Industrial Park,
Nanzha District 5, Humen,523900, Dongguan, Guangdong, China.

Webstie:www.ebeestock.com Email:sales@ebeestock.com

© 2022 Ebeestock Enterprises All Rights Reserved

Snap-On MMBX Plug to SMA Male Cable 60 Inch Length Using ET3 8322J Coax with HeatShrink

# RF Cable Assemblies Technical Data Sheet ET26092

| | |
|---|---|
| One Time Minimum Bend Radius | 0.5 in [12.7 mm] |
| Repeated Minimum Bend Radius | 0.787 in [19.99 mm] |

**Connectors**

| Description | Connector 1 | Connector 2 |
|---|---|---|
| Type | MMBX Plug | SMA Male |
| Specification | | MIL-STD-348A |
| Impedance | 50 Ohms | 50 Ohms |
| Connection Method | Snap-On | |
| Mating Cycles | 100 | |
| Contact Material and Plating | Beryllium Copper, Gold | Brass, Gold |
| Contact Plating Specification | | 50µ in. minimum |
| Dielectric Type | PTFE | Teflon |
| Outer Conductor Material and Plating | Brass, Gold | |
| Body Material and Plating | Brass, Gold | Brass, Gold |
| Body Plating Specification | | 3µ in. minimum |
| Coupling Nut Material and Plating | | Brass, Gold |
| Coupling Nut Plating Specification | | 3µ in. minimum |
| Hex Size | | 5/16 Inch |
| Torque | | 3 in-lbs [0.34 Nm] |

Mechanical Specification Notes:
*All cable assemblies have a length tolerance of 1.5% or ± 3/8”, whichever is greater.

## Environmental Specifications

**Temperature**

Operating Range -55 to +125 deg C

## Compliance Certifications (see product page for current document)

## Plotted and Other Data

Notes:

Click the following link (or enter part number in “SEARCH” on website) to obtain additional part information including price, inventory and certifications: Snap-On MMBX Plug to SMA Male Cable 60 Inch Length Using ET38323 Coax with HeatShrink ET26092

8th Floor, Building 1, Yongfu Science and Technology Center Industrial Park,
Nanzha District 5, Humen,523900, Dongguan, Guangdong, China.

Webstie:www.ebeestock.com Email:sales@ebeestock.com

© 2022 Ebeestock Enterprises All Rights Reserved

Snap-On MMBX Plug to SMA Male Cable 60 Inch Length Using ET3 8322J Coax with HeatShrink

# RF Cable Assemblies Technical Data Sheet ET26092

## How to Order

Part Number Configuration: **ET3W05863/HS - xx uu**

- uu — Unit of Measure:
  - cm = Centimeters
  - <blank> = Inches
- xx — Length
- ET3W05863/HS — Base Number

Example: ET3W05863/HS-12 = 12 inches long cable
ET3W05863/HS-100cm = 100 cm long cable

Snap-On MMBX Plug to SMA Male Cable 60 Inch Length Using ET38323 Coax with HeatShrink from Ebeestock Enterprises has same day shipment for domestic and International orders. Our RF, microwave and millimeter wave products maintain a 99.4% availability and are part of the broadest selection in the industry.

Click the following link (or enter part number in “SEARCH” on website) to obtain additional part information including price, inventory and certifications: Snap-On MMBX Plug to SMA Male Cable 60 Inch Length Using ET38323 Coax with HeatShrink ET26092

**URL:** https://www.ebeestock.com/snap-on-mmbx-plug-to-sma-male-cable-12-inch-length-using-pe-sr405flj-coax-with-heatshrink-0026088

The information contained in this document is accurate to the best of our knowledge and representative of the part described herein. It may be necessary to make modifications to the part and/or the documentation of the part, in order to implement improvements. Ebeestock reserves the right to make such changes as required. Unless otherwise stated, all specifications are nominal. Ebeestock does not make any representation or warranty regarding the suitability of the part described herein for any particular purpose, and Ebeestock does not assume any liability arising out of the use of any part or documentation.

8th Floor, Building 1, Yongfu Science and Technology Center Industrial Park,
Nanzha District 5, Humen,523900, Dongguan, Guangdong, China.

Webstie:www.ebeestock.com Email:sales@ebeestock.com

© 2022 Ebeestock Enterprises All Rights Reserved

© 2022 Ebeestock Enterprises All Rights Reserved

www.ebeestock.com

| REVISIONS | | | |
|---|---|---|---|
| REV. | DESCRIPTION | DATE | APPROVED |
| A | INITIAL RELEASE | 04/30/19 | S.ELLIS |

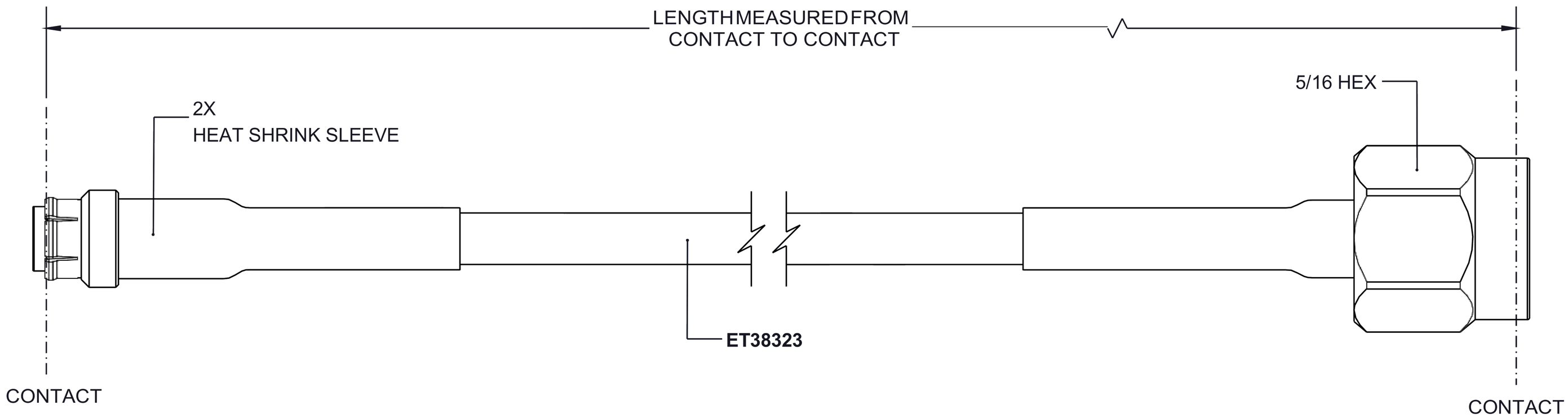


**MMBX SNAP ON MALE**

**SMA MALE**

UNLESS OTHERWISE SPECIFIED
LEADING DIMENSIONS ARE INCHES
DIMENSIONS IN [ ] ARE MILLIMETERS

TOLERANCES:

.X=± .2 [5.08] | FRACTIONS

.XX=± .01 [ .25] | ± 1/32

.XXX=± .005 [ .13] | ANGLES ± 1°

ALL DIMENSIONS SHOWN ARE FOR REFERENCE ONLY.

THIRD ANGLE PROJECTION

PASTERNACK
an INFINITE brand
8th Floor, Building 1, Yongfu Science and Technology Center Industrial Park
P.O.Box 16759, Irvine, CA 92623.
Phone: 1.949.261.1920 | 1.866.727.8376
Fax: 1.949.261.7451
e-mail: sales@Ebeestock.com

THE INFORMATION AND DESIGN IN THIS DOCUMENT IS THE PROPERTY OF Ebeestock CORPORATION. ALL RIGHTS RESERVED.

SHEET 1 OF 1

SCALE N/A

| SIZE | CAGE | DRAWN BY | PART NUMBER | REV |
|---|---|---|---|---|
| A | 53919 | K.DANG | ET3W05863/HS | A |

THESE COMMODITIES, TECHNOLOGY OR SOFTWARE WERE EXPORTED FROM THE UNITED STATES IN ACCORDANCE WITH THE EXPORT ADMINISTRATION REGULATIONS. DIVERSION CONTRARY TO U.S. LAW PROHIBITED.



T-Rev.B