Snap-On MMBX Plug to SSMB Jack Bulkhead Cable 100 cm Length Using ET-RG316 Coax

RF Cable Assemblies Technical Data Sheet ET26103

Configuration

- Connector 1: Snap-OnMMBX Plug
- Connector 2: SSMB Jack Bulkhead
- Cable Type: ET-RG316

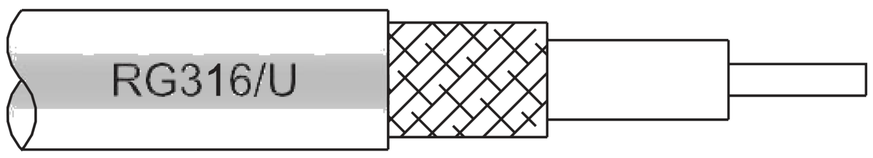

Features

- Max Frequency 3 GHz
- 69% Phase Velocity
- FEP Jacket

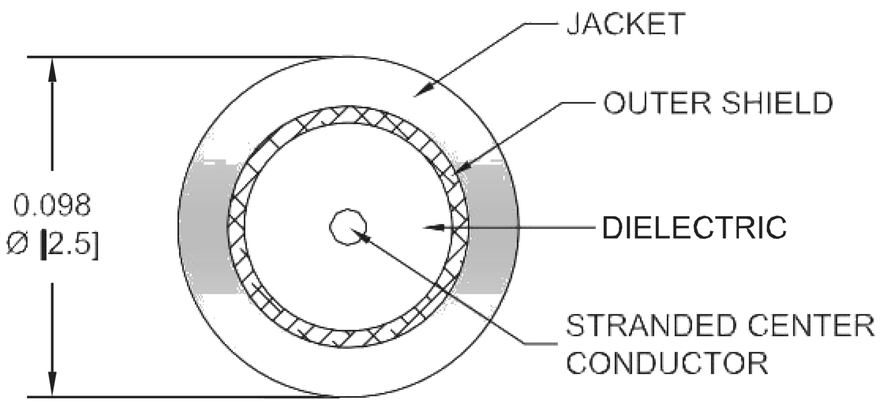

Applications

- General Purpose
- Laboratory Use

Description

Ebeestock's ET26103 MMBX plug snap-on to SSMB jack bulkhead 100 cm cable using ET-RG316 coax is part of our full line of RF components available for same-day shipping. Ebeestock's flexible RF cable assemblies are ideal for applica- tions where tight bends and flexure are required. This Ebeestock MMBX to SSMB cable assembly has a plug to jack gender configuration with 50 ohm flexible ET-RG316 coax. The ET26103 MMBX plug to SSMB jack cable assembly operates to 3 GHz. Our RF cable assembly with SSMB bulkhead interface allows designers to create external connections on their product enclosures, and can be used in a variety of other rack mount and panel mount applications.

Custom versions of most RF cable assemblies can be built and shipped same day. Custom cable assembly lengths can be obtained by specifying the desired length on the web site at time of order or by contacting a sales representative. Other avail- able RF cable assembly value added services include connector orientation or clocking, heat shrink booting and custom label- ing. RF testing can also be performed to document the electrical performance of your cable assembly.

Electrical Specifications

Description	Minimum	Typical	Maximum	Units
Frequency Range	DC		3	GHz
VSWR			1.5:1	
Velocity of Propagation		69		%
Capacitance		29.4 [96.46]		pF/ft [pF/m]
Jacket Spark			2,000	Vrms

Click the following link (or enter part number in "SEARCH" on website) to obtain additional part information including price, inventory and certifications: Snap-On MMBX Plug to SSMB Jack Bulkhead Cable 100 cm Length Using ET-RG316 Coax ET26103

8th Floor, Building 1, Yongfu Science and Technology Center Industrial Park,
Nanzha District 5, Humen,523900, Dongguan, Guangdong, China.

Webstie:www.ebeestock.com Email:sales@ebeestock.com

© 2022 Ebeestock Enterprises All Rights Reserved

Snap-On MMBX Plug to SSMB Jack Bulkhead Cable 100 cm Length Using ET-RG316 Coax

RF Cable Assemblies Technical Data Sheet ET26103

Specifications by Frequency

Description	F1	F2	F3	F4	F5	Units
Frequency	0.25	0.5	1	2.5	3	GHz
Insertion Loss (Max.)	0.73	0.99	1.45	1.94	2.11	dB

Electrical Specification Notes:
The Insertion Loss data above is based on the performance specifications of the coax use in this assembly. The Insertion Loss includes an estimated insertion loss of 0.2dB of connector Loss

Mechanical Specifications

Cable Assembly

Length*	39.37 in [100 cm]
Diameter	0.188 in [4.78 mm]

Cable

Cable Type	ET-RG316
Impedance	50 Ohms
Inner Conductor Type	Stranded
Inner Conductor Material and Plating	Copper Clad Steel, Silver
Dielectric Type	PTFE
Number of Shields	1
Shield Layer 1	Silver Plated Copper Braid
Jacket Material	FEP, Tan
Jacket Diameter	0.102 in [2.59 mm]

Click the following link (or enter part number in “SEARCH” on website) to obtain additional part information including price, inventory and certifications: Snap-On MMBX Plug to SSMB Jack Bulkhead Cable 100 cm Length Using ET-RG316 Coax ET26103

8th Floor, Building 1, Yongfu Science and Technology Center Industrial Park,
Nanzha District 5, Humen,523900, Dongguan, Guangdong, China.

Webstie:www.ebeestock.com Email:sales@ebeestock.com

© 2022 Ebeestock Enterprises All Rights Reserved

Snap-On MMBX Plug to SSMB Jack Bulkhead Cable 100 cm Length Using ET-RG316 Coax

RF Cable Assemblies Technical Data Sheet ET26103

Connectors

Description	Connector 1	Connector 2
Type	MMBX Plug	SSMB Jack Bulkhead
Specification		MIL-STD-348
Impedance	50 Ohms	50 Ohms
Connection Method	Snap-On	
Mating Cycles	100	
Contact Material and Plating	Beryllium Copper, Gold	Gold
Contact Plating Specification		MIL-G-45204
Dielectric Type	PTFE	PTFE
Outer Conductor Material and Plating	Brass, Gold	
Body Material and Plating	Brass, Gold	Brass, Gold
Body Plating Specification		MIL-G-45204

Mechanical Specification Notes:
*All cable assemblies have a length tolerance of 1.5% or ± 3/8”, whichever is greater.

Compliance Certifications (see product page for current document)

Plotted and Other Data

Notes:

Click the following link (or enter part number in “SEARCH” on website) to obtain additional part information including price, inventory and certifications: Snap-On MMBX Plug to SSMB Jack Bulkhead Cable 100 cm Length Using ET-RG316 Coax ET26103

8th Floor, Building 1, Yongfu Science and Technology Center Industrial Park,
Nanzha District 5, Humen,523900, Dongguan, Guangdong, China.

Webstie:www.ebeestock.com Email:sales@ebeestock.com

© 2022 Ebeestock Enterprises All Rights Reserved

Snap-On MMBX Plug to SSMB Jack Bulkhead Cable 100 cm Length Using ET-RG316 Coax

RF Cable Assemblies Technical Data Sheet ET26103

How to Order

Part Number Configuration: **ET3W07532 - xx uu**

- **uu** — Unit of Measure:
  - cm = Centimeters
  - <blank> = Inches
- **xx** — Length
- **ET3W07532** — Base Number

Example: ET3W07532-12 = 12 inches long cable
ET26103 = 100 cm long cable

Snap-On MMBX Plug to SSMB Jack Bulkhead Cable 100 cm Length Using ET-RG316 Coax from Ebeestock Enterprises has same day shipment for domestic and International orders. Our RF, microwave and millimeter wave products maintain a 99.4% availability and are part of the broadest selection in the industry.

Click the following link (or enter part number in “SEARCH” on website) to obtain additional part information including price, inventory and certifications: Snap-On MMBX Plug to SSMB Jack Bulkhead Cable 100 cm Length Using ET-RG316 Coax ET26103

URL: https://www.ebeestock.com/snap-on-mmbx-plug-to-ssmb-jack-bulkhead-cable-12-inch-length-using-rg316-coax-0026097

The information contained in this document is accurate to the best of our knowledge and representative of the part described herein. It may be necessary to make modifications to the part and/or the documentation of the part, in order to implement improvements. Ebeestock reserves the right to make such changes as required. Unless otherwise stated, all specifications are nominal. Ebeestock does not make any representation or warranty regarding the suitability of the part described herein for any particular purpose, and Ebeestock does not assume any liability arising out of the use of any part or documentation.

8th Floor, Building 1, Yongfu Science and Technology Center Industrial Park,
Nanzha District 5, Humen,523900, Dongguan, Guangdong, China.

Webstie:www.ebeestock.com Email:sales@ebeestock.com

© 2022 Ebeestock Enterprises All Rights Reserved

© 2022 Ebeestock Enterprises All Rights Reserved

www.ebeestock.com

REVISIONS			
REV.	DESCRIPTION	DATE	APPROVED
A	INITIAL RELEASE	04/23/19	S.ELLIS

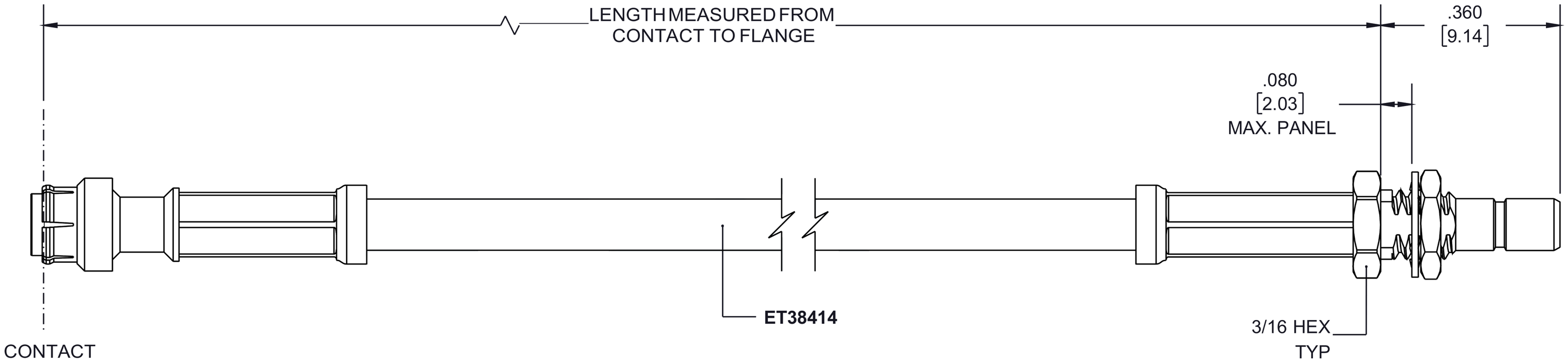

MMBX SNAP ON PLUG

SSMB JACK BULKHEAD

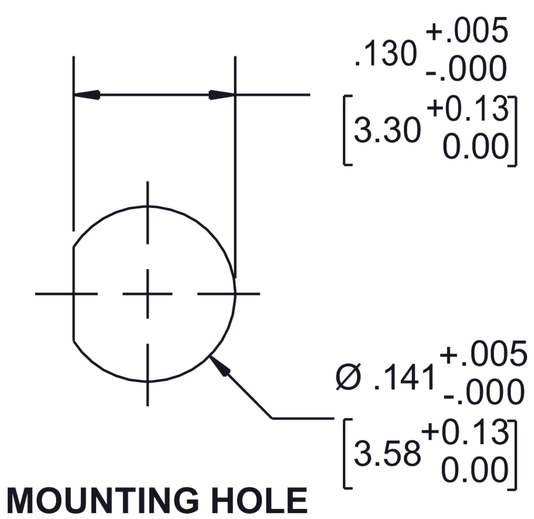

MOUNTING HOLE

UNLESS OTHERWISE SPECIFIED
LEADING DIMENSIONS ARE INCHES
DIMENSIONS IN [ ] ARE MILLIMETERS

TOLERANCES:

.X=± .2	[5.08]	FRACTIONS
.XX=± .01	[.25]	± 1/32
.XXX=± .005	[.13]	ANGLES ± 1°

ALL DIMENSIONS SHOWN ARE FOR REFERENCE ONLY.

THIRD ANGLE PROJECTION

ebeestock
Ebeestock.com
8th Floor, Building 1, Yongfu Science and Technology Center Industrial Park,
Nanzha District 5, Humen,523900, Dongguan, Guangdong, China.
Webstie: www.ebeestock.com **Email:** sales@ebeestock.com

THE INFORMATION AND DESIGN IN THIS DOCUMENT IS THE PROPERTY OF Ebeestock CORPORATION. ALL RIGHTS RESERVED.

SHEET 1 OF 1

SCALE N/A

SIZE	CAGE	DRAWN BY	PART NUMBER	REV
A	53919	K.DANG	ET3W07532	A

THESE COMMODITIES, TECHNOLOGY OR SOFTWARE WERE EXPORTED FROM THE UNITED STATES IN ACCORDANCE WITH THE EXPORT ADMINISTRATION REGULATIONS. DIVERSION CONTRARY TO U.S. LAW PROHIBITED.