MMCX Plug to MMCX Plug Right Angle Cable 48 Inch Length Usin
g ET-ET-RG174 Coax, RoHS

RF Cable Assemblies Technical Data Sheet ET26147

Configuration

- Connector 1: MMCX Plug
- Connector 2: MMCX Plug Right Angle
- Cable Type: ET-RG174

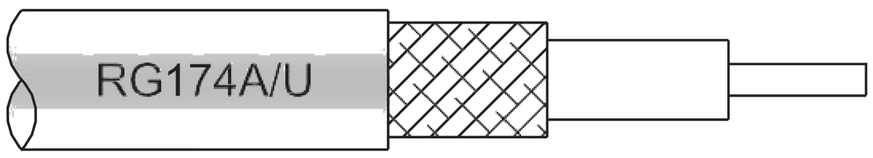

Features

- Max Frequency 1 GHz
- 66% Phase Velocity
- PVC Jacket

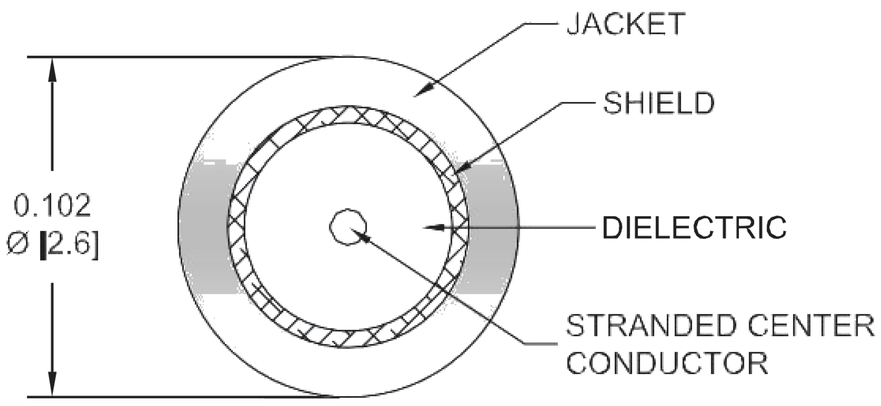

Applications

- General Purpose
- Laboratory Use

Description

Ebeestock's ET26147 MMCX plug to MMCX plug right angle 48 inch cable using ET-RG174 coax is part of our full line of RF components available for same-day shipping. Ebeestock's flexible RF cable assemblies are ideal for applications where tight bends and flexure are required. This Ebeestock MMCX to MMCX cable assembly has a plug to plug gender configuration with 50 ohm flexible ET-RG174 coax. The ET26147 MMCX plug to MMCX plug cable assembly operates to 1 GHz. The right angle MMCX interface on the ET-RG174 cable allows for easier connections in tight spaces.

Custom versions of most RF cable assemblies can be built and shipped same day. Custom cable assembly lengths can be obtained by specifying the desired length on the web site at time of order or by contacting a sales representative. Other available RF cable assembly value added services include connector orientation or clocking, heat shrink booting and custom labeling. RF testing can also be performed to document the electrical performance of your cable assembly.

Click the following link (or enter part number in "SEARCH" on website) to obtain additional part information including price, inventory and certifications: MMCX Plug to MMCX Plug Right Angle Cable 48 Inch Length Using ET-RG174 Coax, RoHS ET26147

8th Floor, Building 1, Yongfu Science and Technology Center Industrial Park,
Nanzha District 5, Humen,523900, Dongguan, Guangdong, China.

Webstie:www.ebeestock.com Email:sales@ebeestock.com

© 2022 Ebeestock Enterprises All Rights Reserved

MMCX Plug to MMCX Plug Right Angle Cable 48 Inch Length Usin
g ET-ET-RG174 Coax, RoHS

RF Cable Assemblies Technical Data Sheet ET26147

Electrical Specifications

Description	Minimum	Typical	Maximum	Units
Frequency Range	DC		1,000	MHz
VSWR			1.4:1	
Velocity of Propagation		66		%
Capacitance		30.8 [101.05]		pF/ft [pF/m]

Specifications by Frequency

Description	F1	F2	F3	F4	F5	Units
Frequency	50	100	250	500	1,000	MHz
Insertion Loss (Typ.)	0.368	0.536	0.748	1.047	1.48	dB
VSWR (Max.)	1.4:1	1.4:1	1.4:1	1.4:1	1.4:1	
Return Loss (Max.)	15.56	15.563	15.563	15.563	15.563	dB

Mechanical Specifications

Cable Assembly

Length*	48 in [121.92 cm]
Diameter	0.276 in [7.01 mm]
Weight	0.039 lbs [17.69 g]

Cable

Cable Type	ET-RG174
Impedance	50 Ohms
Inner Conductor Type	Stranded
Inner Conductor Material and Plating	Copper Clad Steel
Dielectric Type	PE (LD)
Number of Shields	1
Shield Layer 1	Tinned Copper Braid
Jacket Material	PVC, Black
Jacket Diameter	0.1 in [2.54 mm]

Click the following link (or enter part number in “SEARCH” on website) to obtain additional part information including price, inventory and certifications: MMCX Plug to MMCX Plug Right Angle Cable 48 Inch Length Using ET-RG174 Coax, RoHS ET26147

8th Floor, Building 1, Yongfu Science and Technology Center Industrial Park,
Nanzha District 5, Humen,523900, Dongguan, Guangdong, China.

Webstie:www.ebeestock.com Email:sales@ebeestock.com

© 2022 Ebeestock Enterprises All Rights Reserved

MMCX Plug to MMCX Plug Right Angle Cable 48 Inch Length Usin
g ET-ET-RG174 Coax, RoHS

RF Cable Assemblies Technical Data Sheet ET26147

Connectors

Description	Connector 1	Connector 2
Type	MMCX Plug	MMCX Plug Right Angle
Specification	BS EN 122340	BS EN 122340
Impedance	50 Ohms	50 Ohms
Contact Material and Plating	Brass, Gold	Brass, Gold
Contact Plating Specification	30µ in. minimum	30µ in. minimum
Dielectric Type	Teflon	Teflon
Body Material and Plating	Brass, Gold	Brass, Gold
Body Plating Specification	3µ in. minimum	3µ in. minimum

Compliance Certifications (see product page for current document)

Plotted and Other Data

Notes:

- Values at 25°C, sea level.

Click the following link (or enter part number in “SEARCH” on website) to obtain additional part information including price, inventory and certifications: MMCX Plug to MMCX Plug Right Angle Cable 48 Inch Length Using ET-RG174 Coax, RoHS ET26147

8th Floor, Building 1, Yongfu Science and Technology Center Industrial Park,
Nanzha District 5, Humen,523900, Dongguan, Guangdong, China.

Webstie:www.ebeestock.com Email:sales@ebeestock.com

© 2022 Ebeestock Enterprises All Rights Reserved

MMCX Plug to MMCX Plug Right Angle Cable 48 Inch Length Usin
g ET-ET-RG174 Coax, RoHS

RF Cable Assemblies Technical Data Sheet ET26147

How to Order

Part Number Configuration: **ET34881LF - xx uu**

- uu — Unit of Measure:
  - cm = Centimeters
  - <blank> = Inches
- xx — Length
- ET34881LF — Base Number

Example: ET34881LF-12 = 12 inches long cable
ET34881LF-100cm = 100 cm long cable

MMCX Plug to MMCX Plug Right Angle Cable 48 Inch Length Using ET-RG174 Coax, RoHS from Ebeestock Enterprises has same day shipment for domestic and International orders. Our RF, microwave and millimeter wave products maintain a 99.4% availability and are part of the broadest selection in the industry.

Click the following link (or enter part number in “SEARCH” on website) to obtain additional part information including price, inventory and certifications: MMCX Plug to MMCX Plug Right Angle Cable 48 Inch Length Using ET-RG174 Coax, RoHS ET26147

URL: https://www.ebeestock.com/mmcx-plug-to-mmcx-plug-right-angle-cable-12-inch-length-using-rg174-coax-rohs-0026144

The information contained in this document is accurate to the best of our knowledge and representative of the part described herein. It may be necessary to make modifications to the part and/or the documentation of the part, in order to implement improvements. Ebeestock reserves the right to make such changes as required. Unless otherwise stated, all specifications are nominal. Ebeestock does not make any representation or warranty regarding the suitability of the part described herein for any particular purpose, and Ebeestock does not assume any liability arising out of the use of any part or documentation.

8th Floor, Building 1, Yongfu Science and Technology Center Industrial Park,
Nanzha District 5, Humen,523900, Dongguan, Guangdong, China.

Webstie:www.ebeestock.com Email:sales@ebeestock.com

© 2022 Ebeestock Enterprises All Rights Reserved

© 2022 Ebeestock Enterprises All Rights Reserved

www.ebeestock.com

REVISIONS			
REV.	DESCRIPTION	DATE	APPROVED
A	PCR ET34881LF	12/3/2020	S.ELLIS

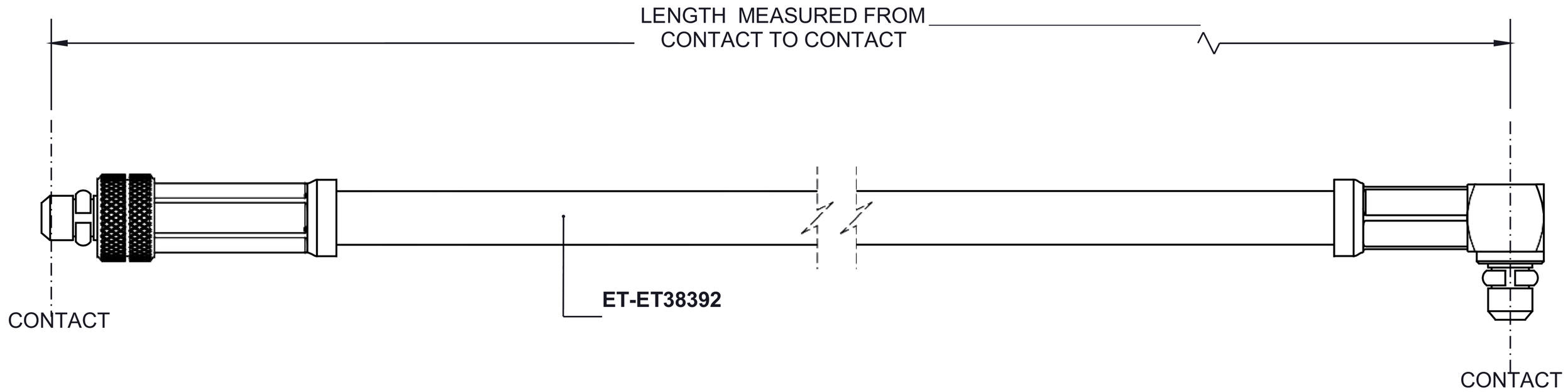

MMCX PLUG

MMCX PLUG RA

THESE COMMODITIES, TECHNOLOGY OR SOFTWARE WERE EXPORTED FROM THE UNITED STATES IN ACCORDANCE WITH THE EXPORT ADMINISTRATION REGULATIONS. DIVERSION CONTRARY TO U.S. LAW PROHIBITED.

UNLESS OTHERWISE SPECIFIED
LEADING DIMENSIONS ARE INCHES
DIMENSIONS IN [ ] ARE MILLIMETERS

TOLERANCES:

.X = ±.2 [5.08]
.XX = ± .02 [.51]
.XXX = ±.005 [.13]

FRACTIONS ± 1/32
ANGLES ± 1°

CABLE LENGTH (L) TOLERANCES:

L ≤ 12 [305] = +1 [25] / -0
12 [305] < L ≤ 60 [1524] = +2 [51] / -0
60 [1524] < L ≤ 120 [3048] = +4 [102] / -0
120 [3048] < L ≤ 300 [7620] = +6 [152] / -0
300 [7620] < L = +5%L / -0

ALL DIMENSIONS SHOWN ARE FOR REFERENCE ONLY.

ebeestock
Ebeestock.com
8th Floor, Building 1, Yongfu Science and Technology Center Industrial Park, Nanzha District 5, Humen,523900, Dongguan, Guangdong, China.
Webstie: www.ebeestock.com **Email:** sales@ebeestock.com

THIRD-ANGLE PROJECTION

THE INFORMATION AND DESIGN IN THIS DOCUMENT IS THE PROPERTY OF Ebeestock CORPORATION ALL RIGHTS RESERVED.

SHEET	OF
1	1

SCALE N/A

SIZE	CAGE CODE	DRAWN BY	ITEM NO.	REV
A	53919	K.DANG	ET34881LF	A

T-Rev.D