MMCX Plug Right Angle to SMA Female Bulkhead Cable 100 cm Le ngth Using ET38398 Coax with HeatShrink

RF Cable Assemblies Technical Data Sheet ET26270

Configuration

- Connector 1: MMCX Plug Right Angle
- Connector 2: SMA Female Bulkhead
- Cable Type: ET38398

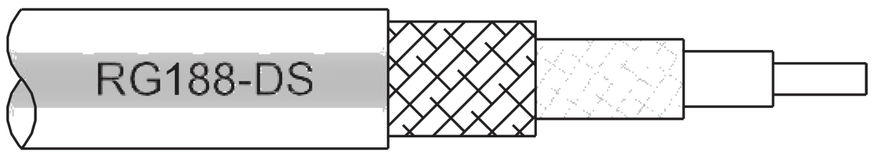

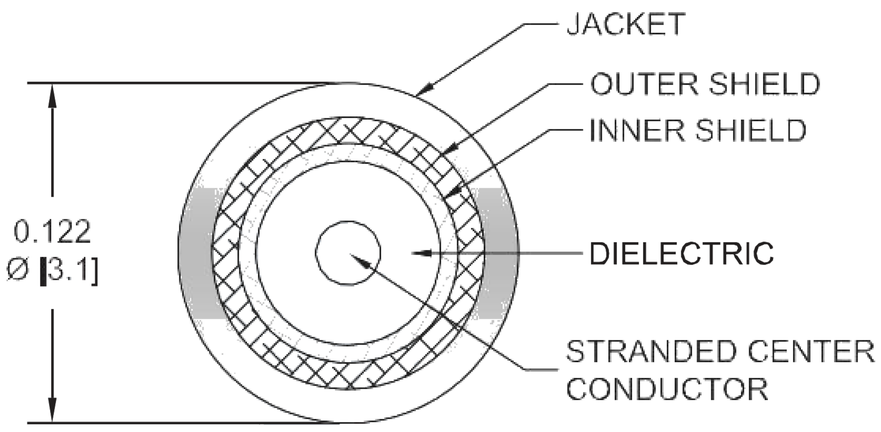

Features

- Max Frequency 6 GHz
- Double Shielded
- PTFE Jacket

Applications

- General Purpose
- Laboratory Use

Description

Ebeestock's ET26270 MMCX plug right angle to SMA female bulkhead 100 cm cable using ET38398 coax is part of our full line of RF components available for same-day shipping. Ebeestock's flexible RF cable assemblies are ideal for applications where tight bends and flexure are required. This Ebeestock MMCX to SMA cable assembly has a plug to female gender configuration with 50 ohm flexible ET38398 coax. The ET26270 MMCX plug to SMA female cable assembly operates to 6 GHz. The right angle MMCX interface on the ET38398 cable allows for easier connections in tight spaces. Our RF cable assembly with SMA bulkhead interface allows designers to create external connections on their product enclosures, and can be used in a variety of other rack mount and panel mount applications. The double shielding of this Ebeestock cable assembly provides excellent shielding effectiveness.

Custom versions of most RF cable assemblies can be built and shipped same day. Custom cable assembly lengths can be obtained by specifying the desired length on the web site at time of order or by contacting a sales representative. Other available RF cable assembly value added services include connector orientation or clocking, heat shrink booting and custom labeling. RF testing can also be performed to document the electrical performance of your cable assembly.

Electrical Specifications

Description	Minimum	Typical	Maximum	Units
Frequency Range	DC		6	GHz
VSWR			1.5:1	
Capacitance		32 [104.99]		pF/ft [pF/m]

Click the following link (or enter part number in "SEARCH" on website) to obtain additional part information including price, inventory and certifications: MMCX Plug Right Angle to SMA Female Bulkhead Cable 100 cm Length Using ET38398 Coax with HeatShrink ET26270

8th Floor, Building 1, Yongfu Science and Technology Center Industrial Park,
Nanzha District 5, Humen,523900, Dongguan, Guangdong, China.

Webstie:www.ebeestock.com Email:sales@ebeestock.com

© 2022 Ebeestock Enterprises All Rights Reserved

MMCX Plug Right Angle to SMA Female Bulkhead Cable 100 cm Le ngth Using ET38398 Coax with HeatShrink

PICTURE UNAVAILABLE

RF Cable Assemblies Technical Data Sheet ET26270

Specifications by Frequency

Description	F1	F2	F3	F4	F5	Units
Frequency	0.5	1	2	4	6	GHz
Insertion Loss (Max.)	0.55	1.29	1.12	2.01	2.9	dB

Electrical Specification Notes:
The Insertion Loss data above is based on the performance specifications of the coax use in this assembly. The Insertion Loss includes an estimated insertion loss of 0.3dB of connector Loss

Mechanical Specifications

Cable Assembly

Length*	39.37 in [100 cm]

Cable

Cable Type	ET38398
Impedance	50 Ohms
Inner Conductor Type	Stranded
Inner Conductor Material and Plating	Copper Clad Steel, Silver
Dielectric Type	PTFE
Number of Shields	2
Shield Layer 1	Silver Plated Copper Braid
Shield Layer 2	Silver Plated Copper Braid
Jacket Material	PTFE, White
Jacket Diameter	0.118 in [3 mm]

Connectors

Description	Connector 1	Connector 2
Type	MMCX Plug Right Angle	SMA Female Bulkhead
Specification	BS EN 122340	
Impedance	50 Ohms	50 Ohms
Contact Material and Plating	Brass, Gold	Gold
Contact Plating Specification	30µ in. minimum	
Dielectric Type	Teflon	
Body Material and Plating	Brass, Gold	Brass, Nickel
Body Plating Specification	3µ in. minimum	

Mechanical Specification Notes:
*All cable assemblies have a length tolerance of 1.5% or ± 3/8”, whichever is greater.

Click the following link (or enter part number in “SEARCH” on website) to obtain additional part information including price, inventory and certifications: MMCX Plug Right Angle to SMA Female Bulkhead Cable 100 cm Length Using ET38398 Coax with HeatShrink ET26270

8th Floor, Building 1, Yongfu Science and Technology Center Industrial Park,
Nanzha District 5, Humen,523900, Dongguan, Guangdong, China.

Webstie:www.ebeestock.com Email:sales@ebeestock.com

© 2022 Ebeestock Enterprises All Rights Reserved

MMCX Plug Right Angle to SMA Female Bulkhead Cable 100 cm Le
ngth Using ET38398 Coax with HeatShrink

RF Cable Assemblies Technical Data Sheet ET26270

Compliance Certifications (see product page for current document)

Plotted and Other Data

Notes:

How to Order

Part Number Configuration: **ET3W00934/HS - xx uu**

- uu — Unit of Measure: cm = Centimeters; <blank> = Inches
- xx — Length
- ET3W00934/HS — Base Number

Example: ET3W00934/HS-12 = 12 inches long cable
ET26270 = 100 cm long cable

MMCX Plug Right Angle to SMA Female Bulkhead Cable 100 cm Length Using ET38398 Coax with HeatShrink from Ebeestock Enterprises has same day shipment for domestic and International orders. Our RF, microwave and millimeter wave products maintain a 99.4% availability and are part of the broadest selection in the industry.

Click the following link (or enter part number in “SEARCH” on website) to obtain additional part information including price, inventory and certifications: MMCX Plug Right Angle to SMA Female Bulkhead Cable 100 cm Length Using ET38398 Coax with HeatShrink ET26270

URL: https://www.ebeestock.com/mmcx-plug-right-angle-to-sma-female-bulkhead-cable-12-inch-length-using-rg188-ds-coax-with-heatshrink-0026264

The information contained in this document is accurate to the best of our knowledge and representative of the part described herein. It may be necessary to make modifications to the part and/or the documentation of the part, in order to implement improvements. Ebeestock reserves the right to make such changes as required. Unless otherwise stated, all specifications are nominal. Ebeestock does not make any representation or warranty regarding the suitability of the part described herein for any particular purpose, and Ebeestock does not assume any liability arising out of the use of any part or documentation.

8th Floor, Building 1, Yongfu Science and Technology Center Industrial Park,
Nanzha District 5, Humen,523900, Dongguan, Guangdong, China.

Webstie:www.ebeestock.com Email:sales@ebeestock.com

© 2022 Ebeestock Enterprises All Rights Reserved

© 2022 Ebeestock Enterprises All Rights Reserved

www.ebeestock.com

REVISIONS			
REV.	DESCRIPTION	DATE	APPROVED
A	INITIAL RELEASE	04/23/19	S.ELLIS

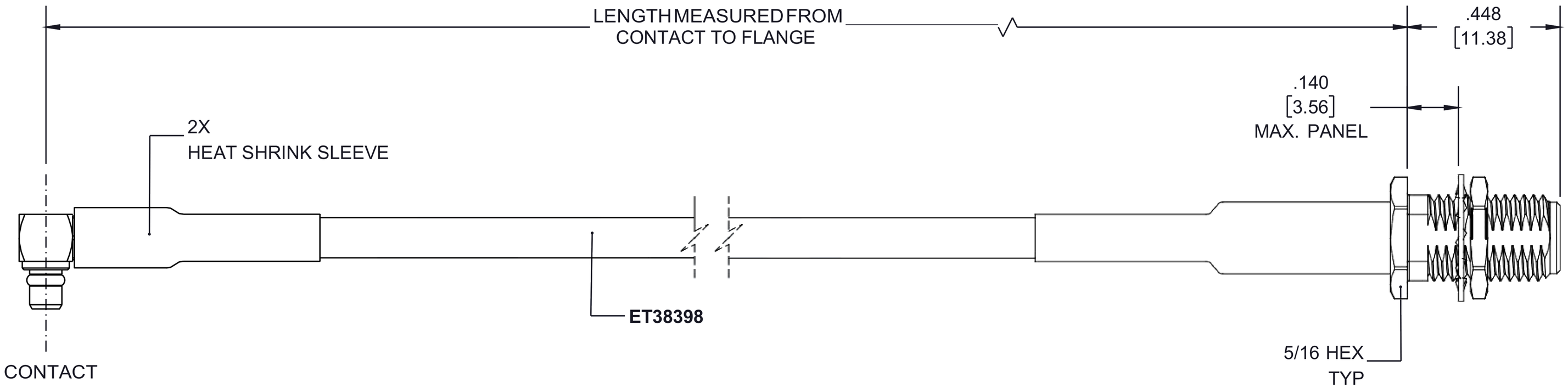

MMCX PLUG
RA

SMA FEMALE
BULKHEAD

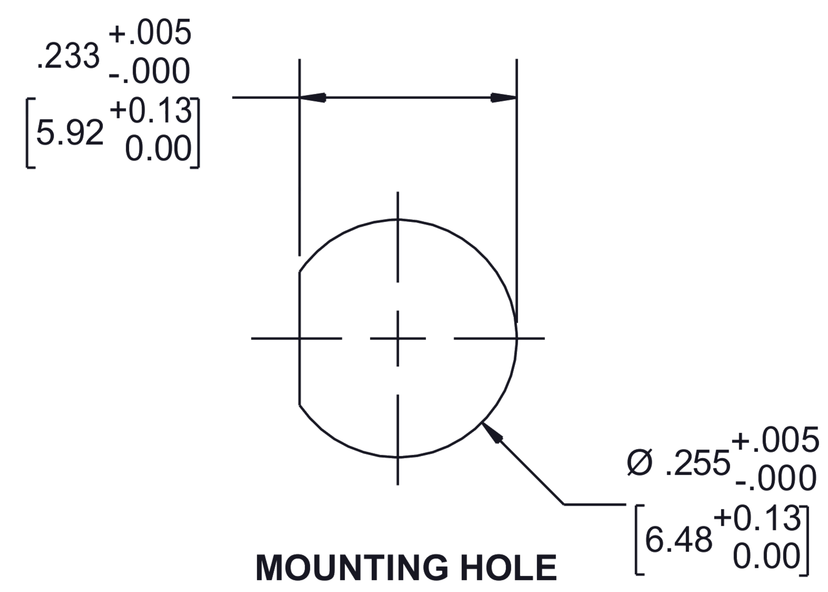

MOUNTING HOLE

UNLESS OTHERWISE SPECIFIED
LEADING DIMENSIONS ARE INCHES
DIMENSIONS IN [ ] ARE MILLIMETERS

TOLERANCES:

.X=± .2 [5.08] | FRACTIONS
.XX=± .01 [.25] | ± 1/32
.XXX=± .005 [.13] | ANGLES ± 1°

ALL DIMENSIONS SHOWN ARE FOR REFERENCE ONLY.

THIRD ANGLE PROJECTION

PASTERNACK
an INFINITE brand
8th Floor, Building 1, Yongfu Science and Technology Center Industrial Park
P.O.Box 16759, Irvine, CA 92623.
Phone: 1.949.261.1920 | 1.866.727.8376
Fax: 1.949.261.7451
e-mail: sales@Ebeestock.com

THE INFORMATION AND DESIGN IN THIS DOCUMENT IS THE PROPERTY OF Ebeestock CORPORATION. ALL RIGHTS RESERVED.

SHEET 1 OF 1

SCALE N/A

SIZE	CAGE	DRAWN BY	PART NUMBER	REV
A	53919	K.DANG	ET3W00934/HS	A

THESE COMMODITIES, TECHNOLOGY OR SOFTWARE WERE EXPORTED FROM THE UNITED STATES IN ACCORDANCE WITH THE EXPORT ADMINISTRATION REGULATIONS. DIVERSION CONTRARY TO U.S. LAW PROHIBITED.

T-Rev.B