MMCX Plug to N Female Bulkhead Cable 24 Inch Length Using ET 38342 Coax

RF Cable Assemblies Technical Data Sheet ET26283

Configuration

- Connector 1: MMCX Plug
- Connector 2: N Female Bulkhead
- Cable Type: ET38342

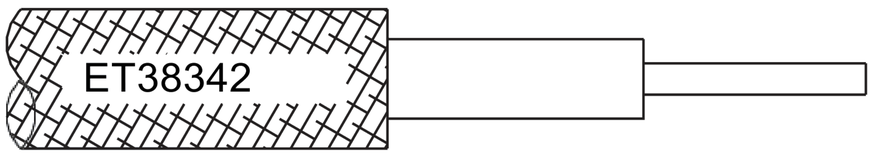

Features

- 69.5% Phase Velocity

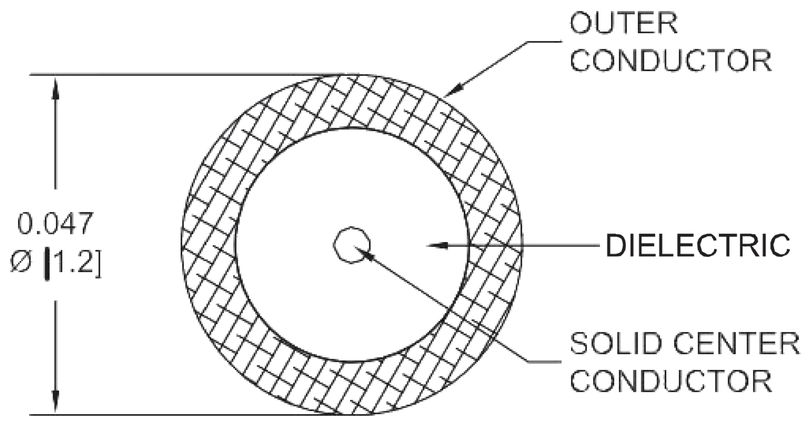

Applications

- General Purpose
- Laboratory Use

Description

Ebeestock's ET26283 MMCX plug to type N female bulkhead 24 inch cable using ET38342 coax is part of our full line of RF components available for same-day shipping. Ebeestock's formable RF cable assemblies provide an alternative to costly pre-formed semi-rigid assemblies since they are hand formable. This Ebeestock MMCX to type N cable assembly has a plug to female gender configuration with 50 ohm formable ET38342 coax. Our RF cable assembly with type N bulkhead interface allows designers to create external connections on their product enclosures, and can be used in a variety of other rack mount and panel mount applications.

Custom versions of most RF cable assemblies can be built and shipped same day. Custom cable assembly lengths can be obtained by specifying the desired length on the web site at time of order or by contacting a sales representative. Other available RF cable assembly value added services include connector orientation or clocking, heat shrink booting and custom labeling. RF testing can also be performed to document the electrical performance of your cable assembly.

Electrical Specifications

Description	Minimum	Typical	Maximum	Units
Velocity of Propagation		69.5		%
Capacitance		32 [104.99]		pF/ft [pF/m]
DC Resistance Inner Conductor		207 [679.13]		Ohms/1000ft [Ohms/Km]
DC Resistance Outer Conductor		8 [26.25]		Ohms/1000ft [Ohms/Km]

Click the following link (or enter part number in "SEARCH" on website) to obtain additional part information including price, inventory and certifications: MMCX Plug to N Female Bulkhead Cable 24 Inch Length Using ET38342 Coax ET26283

8th Floor, Building 1, Yongfu Science and Technology Center Industrial Park,
Nanzha District 5, Humen,523900, Dongguan, Guangdong, China.

Webstie:www.ebeestock.com Email:sales@ebeestock.com

© 2022 Ebeestock Enterprises All Rights Reserved

MMCX Plug to N Female Bulkhead Cable 24 Inch Length Using ET 38342 Coax

RF Cable Assemblies Technical Data Sheet ET26283

Mechanical Specifications

Cable Assembly

Length*	24 in [609.6 mm]
Diameter	0.812 in [20.62 mm]

Cable

Cable Type	ET38342
Impedance	50 Ohms
Inner Conductor Type	Solid
Inner Conductor Material and Plating	Copper Clad Steel, Silver
Dielectric Type	PTFE
Number of Shields	1
Outer Conductor Material and Plating	Tinned Copper Braid

Connectors

Description	Connector 1	Connector 2
Type	MMCX Plug	N Female Bulkhead
Impedance	50 Ohms	50 Ohms
Contact Material and Plating	Brass, Gold	Gold
Dielectric Type	PTFE	Teflon
Outer Conductor Material and Plating		Brass, Gold
Body Material and Plating	Brass, Gold	Brass, Nickel

Mechanical Specification Notes:
*All cable assemblies have a length tolerance of 1.5% or ± 3/8”, whichever is greater.

Compliance Certifications (see product page for current document)

Plotted and Other Data

Notes:

Click the following link (or enter part number in “SEARCH” on website) to obtain additional part information including price, inventory and certifications: MMCX Plug to N Female Bulkhead Cable 24 Inch Length Using ET38342 Coax ET26283

8th Floor, Building 1, Yongfu Science and Technology Center Industrial Park,
Nanzha District 5, Humen,523900, Dongguan, Guangdong, China.

Webstie:www.ebeestock.com Email:sales@ebeestock.com

© 2022 Ebeestock Enterprises All Rights Reserved

MMCX Plug to N Female Bulkhead Cable 24 Inch Length Using ET 38342 Coax

RF Cable Assemblies Technical Data Sheet ET26283

How to Order

Part Number Configuration: **ET3W07591 - xx uu**

- ET3W07591: Base Number
- xx: Length
- uu: Unit of Measure:
  - cm = Centimeters
  - <blank> = Inches

Example: ET3W07591-12 = 12 inches long cable
ET3W07591-100cm = 100 cm long cable

MMCX Plug to N Female Bulkhead Cable 24 Inch Length Using ET38342 Coax from Ebeestock Enterprises has same day shipment for domestic and International orders. Our RF, microwave and millimeter wave products maintain a 99.4% availability and are part of the broadest selection in the industry.

Click the following link (or enter part number in “SEARCH” on website) to obtain additional part information including price, inventory and certifications: MMCX Plug to N Female Bulkhead Cable 24 Inch Length Using ET38342 Coax ET26283

URL: https://www.ebeestock.com/mmcx-plug-to-n-female-bulkhead-cable-12-inch-length-using-pe-sr047fl-coax-0026282

The information contained in this document is accurate to the best of our knowledge and representative of the part described herein. It may be necessary to make modifications to the part and/or the documentation of the part, in order to implement improvements. Ebeestock reserves the right to make such changes as required. Unless otherwise stated, all specifications are nominal. Ebeestock does not make any representation or warranty regarding the suitability of the part described herein for any particular purpose, and Ebeestock does not assume any liability arising out of the use of any part or documentation.

8th Floor, Building 1, Yongfu Science and Technology Center Industrial Park,
Nanzha District 5, Humen,523900, Dongguan, Guangdong, China.

Webstie:www.ebeestock.com Email:sales@ebeestock.com

© 2022 Ebeestock Enterprises All Rights Reserved

© 2022 Ebeestock Enterprises All Rights Reserved

www.ebeestock.com

REVISIONS			
REV.	DESCRIPTION	DATE	APPROVED
A	INITIAL RELEASE	04/23/19	S.ELLIS

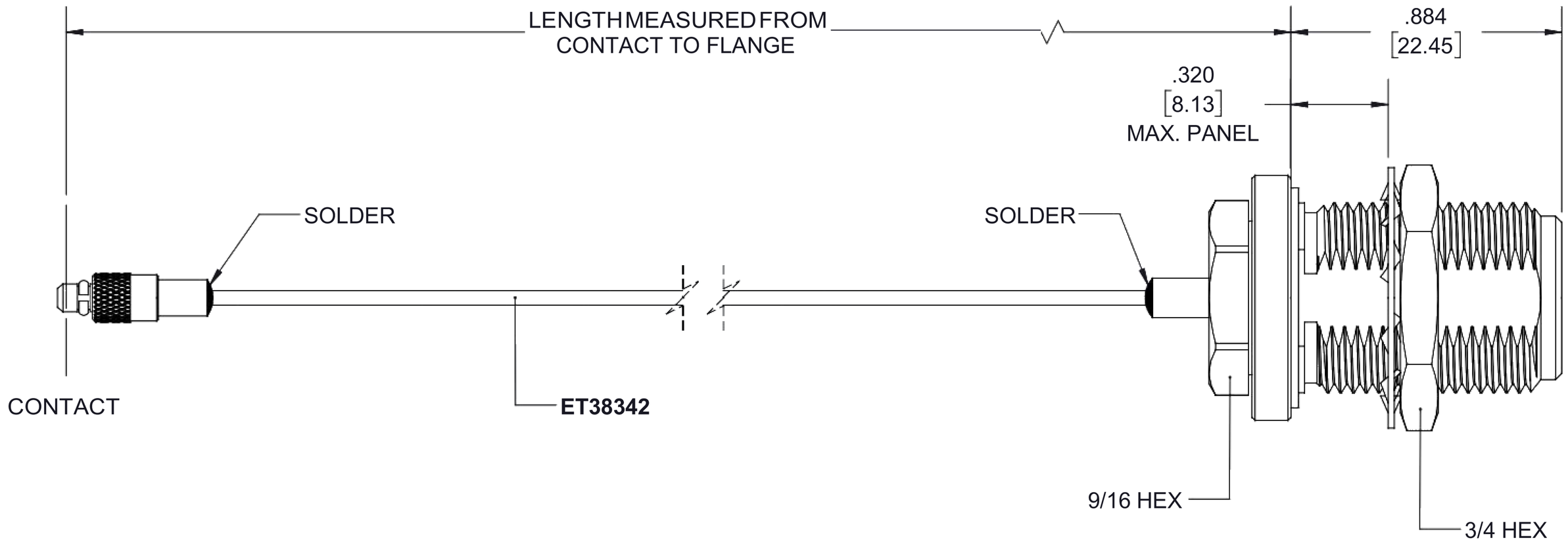

MMCX PLUG

N FEMALE BULKHEAD

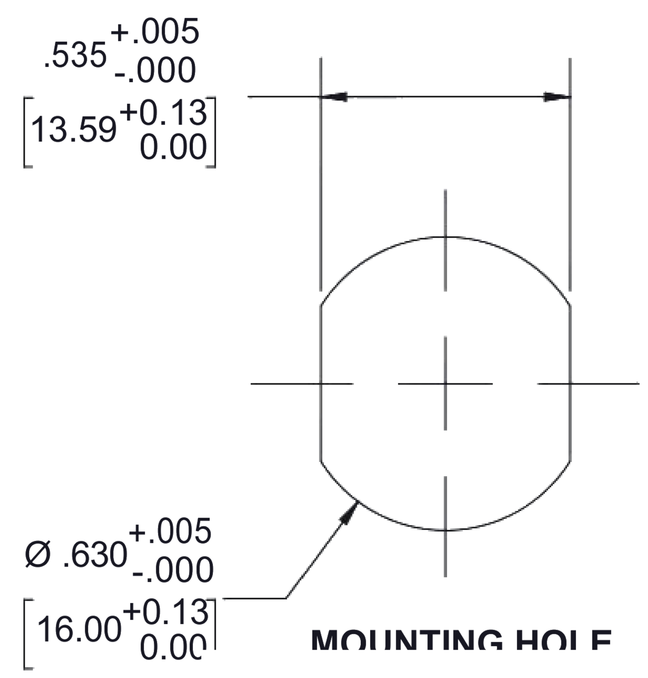

MOUNTING HOLE

UNLESS OTHERWISE SPECIFIED
LEADING DIMENSIONS ARE INCHES
DIMENSIONS IN [ ] ARE MILLIMETERS

TOLERANCES:

.X=± .2	[5.08]	FRACTIONS
.XX=± .01	[.25]	± 1/32
.XXX=± .005	[.13]	ANGLES ± 1°

ALL DIMENSIONS SHOWN ARE FOR REFERENCE ONLY.

THIRD ANGLE PROJECTION

ebeestock
Ebeestock.com
8th Floor, Building 1, Yongfu Science and Technology Center Industrial Park,
Nanzha District 5, Humen,523900, Dongguan, Guangdong, China.
Webstie: www.ebeestock.com **Email:** sales@ebeestock.com

THE INFORMATION AND DESIGN IN THIS DOCUMENT IS THE PROPERTY OF Ebeestock CORPORATION. ALL RIGHTS RESERVED.

SHEET 1 OF 1

SCALE N/A

SIZE	CAGE	DRAWN BY	PART NUMBER	REV
A	53919	K.DANG	ET3W07591	A

THESE COMMODITIES, TECHNOLOGY OR SOFTWARE WERE EXPORTED FROM THE UNITED STATES IN ACCORDANCE WITH THE EXPORT ADMINISTRATION REGULATIONS. DIVERSION CONTRARY TO U.S. LAW PROHIBITED.

T-Rev.B