SMA Female Bulkhead to MMCX Plug Right Angle Cable 24 Inch L ength Using ET-RG316 Coax

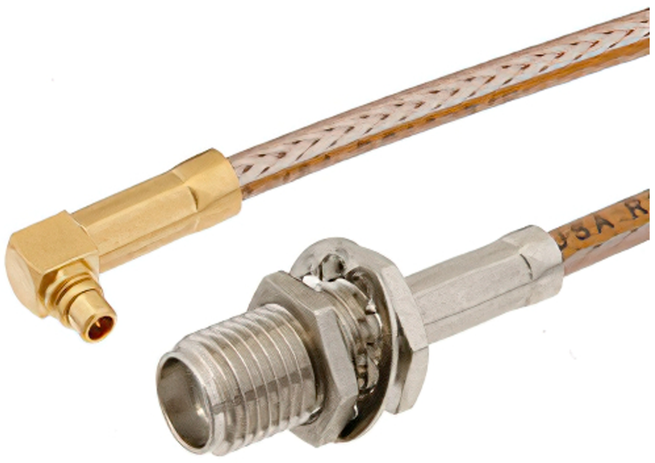

RF Cable Assemblies Technical Data Sheet ET26337

Configuration

- Connector 1: SMA Female Bulkhead
- Connector 2: MMCX Plug Right Angle
- Cable Type: ET-RG316

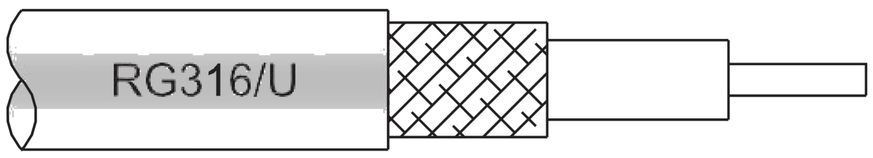

Features

- FEP Jacket

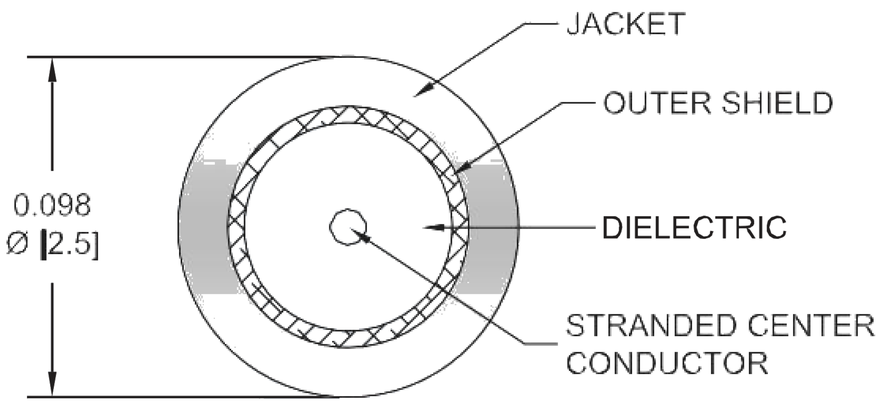

Applications

- General Purpose
- Laboratory Use

Description

Ebeestock's ET26337 SMA female bulkhead to MMCX plug right angle 24 inch cable using ET-RG316 coax is part of our full line of RF components available for same-day shipping. Ebeestock's flexible RF cable assemblies are ideal for applications where tight bends and flexure are required. This Ebeestock SMA to MMCX cable assembly has a female to plug gender configuration with 50 ohm flexible ET-RG316 coax. The right angle MMCX interface on the ET-RG316 cable allows for easier connections in tight spaces. Our RF cable assembly with SMA bulkhead interface allows designers to create external connections on their product enclosures, and can be used in a variety of other rack mount and panel mount applications.

Custom versions of most RF cable assemblies can be built and shipped same day. Custom cable assembly lengths can be obtained by specifying the desired length on the web site at time of order or by contacting a sales representative. Other available RF cable assembly value added services include connector orientation or clocking, heat shrink booting and custom labeling. RF testing can also be performed to document the electrical performance of your cable assembly.

Electrical Specifications

Description	Minimum	Typical	Maximum	Units
Capacitance		32 [104.99]		pF/ft [pF/m]

Mechanical Specifications

Cable Assembly

Length*	24 in [609.6 mm]
Diameter	0.312 in [7.92 mm]
Weight	0.023 lbs [10.43 g]

Click the following link (or enter part number in "SEARCH" on website) to obtain additional part information including price, inventory and certifications: SMA Female Bulkhead to MMCX Plug Right Angle Cable 24 Inch Length Using ET-RG316 Coax ET26337

8th Floor, Building 1, Yongfu Science and Technology Center Industrial Park,
Nanzha District 5, Humen,523900, Dongguan, Guangdong, China.

Webstie:www.ebeestock.com Email:sales@ebeestock.com

© 2022 Ebeestock Enterprises All Rights Reserved

SMA Female Bulkhead to MMCX Plug Right Angle Cable 24 Inch L ength Using ET-RG316 Coax

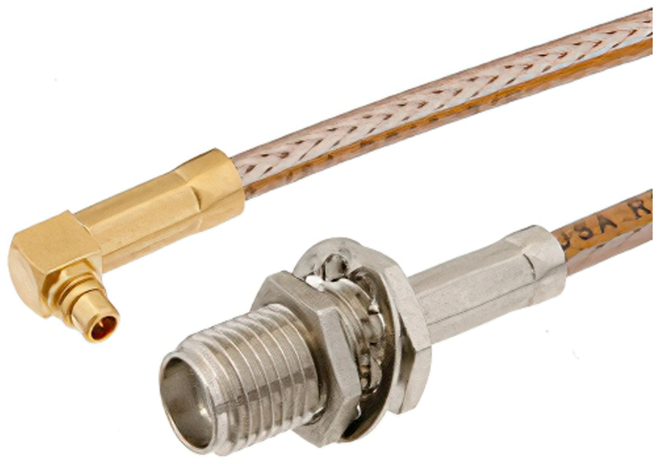

RF Cable Assemblies Technical Data Sheet ET26337

Cable

Cable Type	ET-RG316
Impedance	50 Ohms
Inner Conductor Type	Stranded
Inner Conductor Material and Plating	Copper Clad Steel, Silver
Dielectric Type	PTFE
Number of Shields	1
Shield Layer 1	Silver Plated Copper Braid
Jacket Material	FEP, Tan
Jacket Diameter	0.098 in [2.49 mm]

Connectors

Description	Connector 1	Connector 2
Type	SMA Female Bulkhead	MMCX Plug Right Angle
Specification		BS EN 122340
Impedance	50 Ohms	50 Ohms
Contact Material and Plating	Gold	Brass, Gold
Contact Plating Specification		30µ in. minimum
Dielectric Type		Teflon
Body Material and Plating	Brass, Nickel	Brass, Gold
Body Plating Specification		3µ in. minimum

Mechanical Specification Notes:
*All cable assemblies have a length tolerance of 1.5% or ± 3/8”, whichever is greater.

Environmental Specifications

Temperature

Operating Range	-55 to +155 deg C

Compliance Certifications (see product page for current document)

Plotted and Other Data

Notes:
- Values at 25°C, sea level.

Click the following link (or enter part number in “SEARCH” on website) to obtain additional part information including price, inventory and certifications: SMA Female Bulkhead to MMCX Plug Right Angle Cable 24 Inch Length Using ET-RG316 Coax ET26337

8th Floor, Building 1, Yongfu Science and Technology Center Industrial Park,
Nanzha District 5, Humen,523900, Dongguan, Guangdong, China.

Webstie:www.ebeestock.com Email:sales@ebeestock.com

© 2022 Ebeestock Enterprises All Rights Reserved

SMA Female Bulkhead to MMCX Plug Right Angle Cable 24 Inch L ength Using ET-RG316 Coax

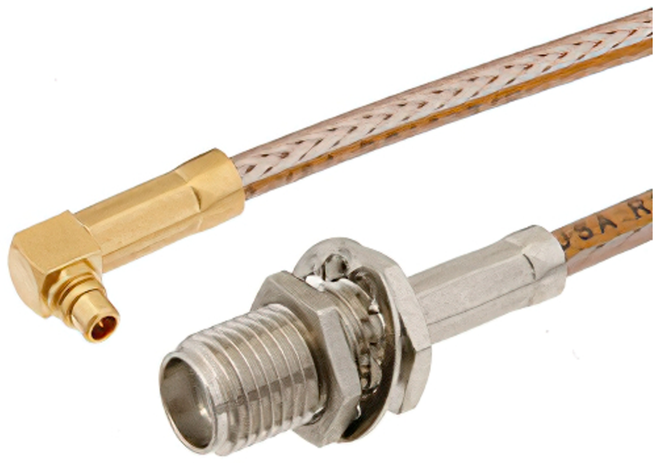

RF Cable Assemblies Technical Data Sheet ET26337

How to Order

Part Number Configuration: **ET34686 - xx uu**

- uu: Unit of Measure:
  - cm = Centimeters
  - <blank> = Inches
- xx: Length
- ET34686: Base Number

Example: ET34686-12 = 12 inches long cable
ET34686-100cm = 100 cm long cable

SMA Female Bulkhead to MMCX Plug Right Angle Cable 24 Inch Length Using ET-RG316 Coax from Ebeestock Enterprises has same day shipment for domestic and International orders. Our RF, microwave and millimeter wave products maintain a 99.4% availability and are part of the broadest selection in the industry.

Click the following link (or enter part number in “SEARCH” on website) to obtain additional part information including price, inventory and certifications: SMA Female Bulkhead to MMCX Plug Right Angle Cable 24 Inch Length Using ET-RG316 Coax ET26337

URL: https://www.ebeestock.com/sma-female-bulkhead-to-mmcx-plug-right-angle-cable-12-inch-length-using-rg316-coax-0026336

The information contained in this document is accurate to the best of our knowledge and representative of the part described herein. It may be necessary to make modifications to the part and/or the documentation of the part, in order to implement improvements. Ebeestock reserves the right to make such changes as required. Unless otherwise stated, all specifications are nominal. Ebeestock does not make any representation or warranty regarding the suitability of the part described herein for any particular purpose, and Ebeestock does not assume any liability arising out of the use of any part or documentation.

8th Floor, Building 1, Yongfu Science and Technology Center Industrial Park,
Nanzha District 5, Humen,523900, Dongguan, Guangdong, China.

Webstie:www.ebeestock.com Email:sales@ebeestock.com

© 2022 Ebeestock Enterprises All Rights Reserved

© 2022 Ebeestock Enterprises All Rights Reserved

www.ebeestock.com

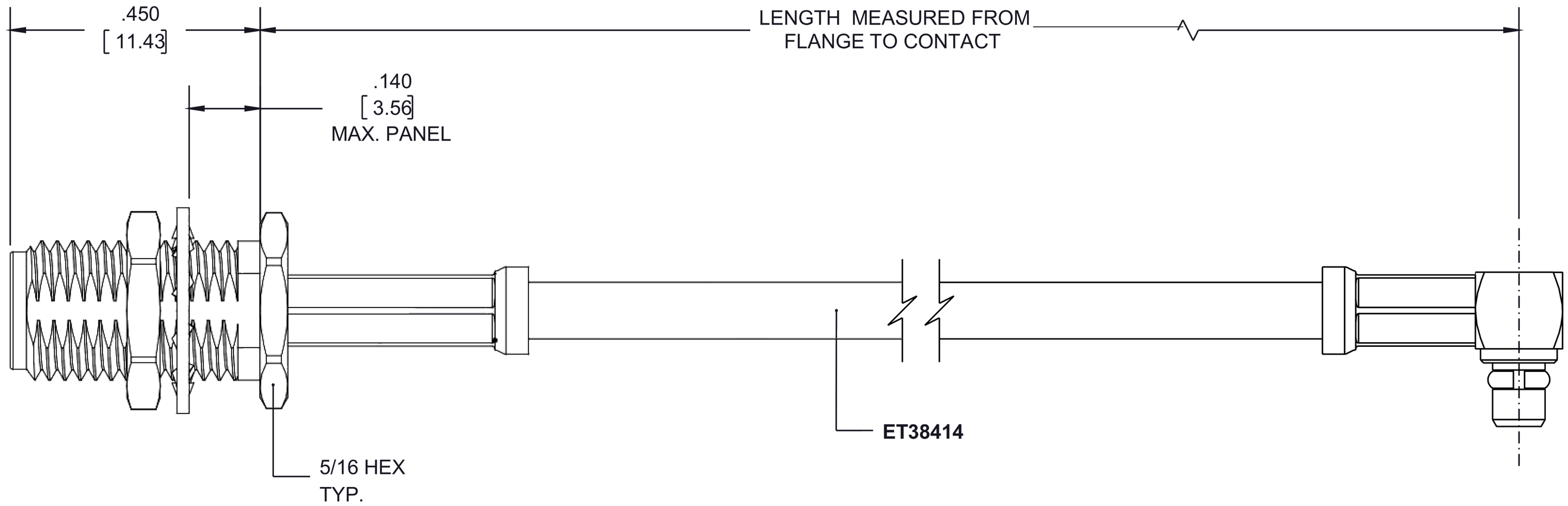

SMA FEMALE BULKHEAD

MMCX PLUG RA

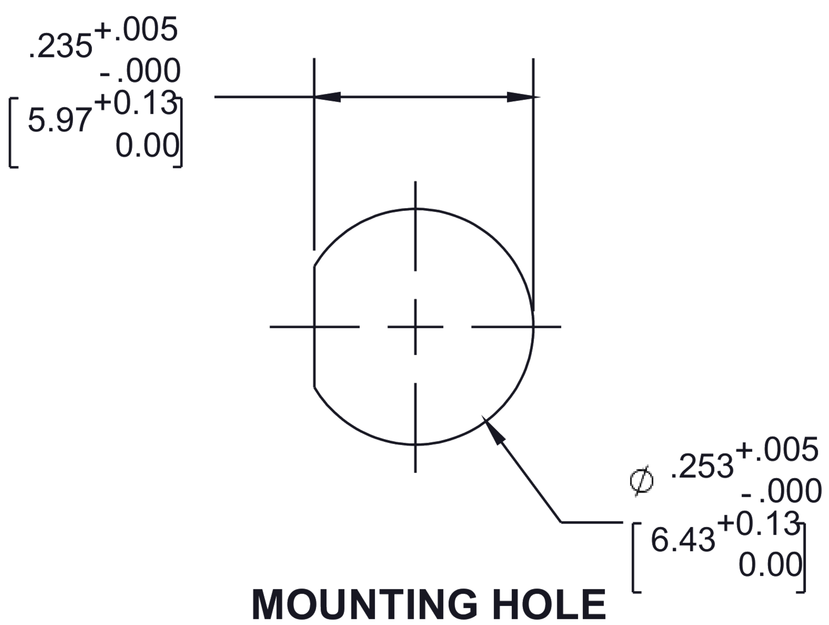

MOUNTING HOLE

STANDARD TOLERANCES	
.X	±0.2
.XX	±0.01
.XXX	±0.005

*STANDARD TOLERANCES APPLY ONLY TO DIMENSIONS IN INCHES

ebeestock
Ebeestock.com
8th Floor, Building 1, Yongfu Science
and Technology Center Industrial Park,
Nanzha District 5, Humen,523900, Dongguan, Guangdong, China.
Webstie: www.ebeestock.com **Email:** sales@ebeestock.com

DWG TITLE

ET34686

NOTES:
1. UNLESS OTHERWISE SPECIFIED ALL DIMENSIONS ARE NOMINAL.
2. ALL SPECIFICATIONS ARE SUBJECT TO CHANGE WITHOUT NOTICE AT ANY TIME.
3. DIMENSIONS ARE IN INCHES [mm].

CAGE CODE 53919	CAD FILE 10/10/18	SCALE N/A	SIZE A	7361

© 2022 Ebeestock Enterprises All Rights Reserved