N Male to N Male Cable 84 Inch Length Using ET-RG214 Coax

# RF Cable Assemblies Technical Data Sheet ET26468

## Configuration

- Connector 1: N Male
- Connector 2: N Male
- Cable Type: ET-RG214

## Features

- Max Frequency 11 GHz
- 66% Phase Velocity
- Double Shielded
- PVC Jacket

## Applications

- General Purpose
- Laboratory Use

### Description

Ebeestock's ET26468 type N male to type N male 84 inch cable using ET-RG214 coax is part of our full line of RF components available for same-day shipping. Ebeestock's flexible RF cable assemblies are ideal for applications where tight bends and flexure are required. This Ebeestock type N to type N cable assembly has a male to male gender configuration with 50 ohm flexible ET-RG214 coax. The ET26468 type N male to type N male cable assembly operates to 11 GHz. The double shielding of this Ebeestock cable assembly provides excellent shielding effectiveness.

Custom versions of most RF cable assemblies can be built and shipped same day. Custom cable assembly lengths can be obtained by specifying the desired length on the web site at time of order or by contacting a sales representative. Other available RF cable assembly value added services include connector orientation or clocking, heat shrink booting and custom labeling. RF testing can also be performed to document the electrical performance of your cable assembly.

Click the following link (or enter part number in "SEARCH" on website) to obtain additional part information including price, inventory and certifications: N Male to N Male Cable 84 Inch Length Using ET-RG214 Coax ET26468

8th Floor, Building 1, Yongfu Science and Technology Center Industrial Park,
Nanzha District 5, Humen,523900, Dongguan, Guangdong, China.

Webstie:www.ebeestock.com Email:sales@ebeestock.com

© 2022 Ebeestock Enterprises All Rights Reserved

N Male to N Male Cable 84 Inch Length Using ET-RG214 Coax

# RF Cable Assemblies Technical Data Sheet ET26468

## Electrical Specifications

| Description | Minimum | Typical | Maximum | Units |
|---|---|---|---|---|
| Frequency Range | DC | | 11 | GHz |
| VSWR | | | 1.5:1 | |
| Velocity of Propagation | | 66 | | % |
| Capacitance | | 30.8 [101.05] | | pF/ft [pF/m] |
| Operating Voltage (AC) | | | 1,000 | Vrms |

## Specifications by Frequency

| Description | F1 | F2 | F3 | F4 | F5 | Units |
|---|---|---|---|---|---|---|
| Frequency | 0.5 | 1 | 2.5 | 5 | 11 | GHz |
| Insertion Loss (Typ.) | 0.29 | 0.35 | 1.08 | 1.65 | 2.76 | dB |

Electrical Specification Notes:
The Insertion Loss data above is based on the performance specifications of the coax used in this assembly. The Insertion Loss includes as estimated insertion loss of 0.1dB per connector.

## Mechanical Specifications

### Cable Assembly

| | |
|---|---|
| Length* | 84 in [213.36 cm] |
| Weight | 0.998 lbs [452.69 g] |

### Cable

| | |
|---|---|
| Cable Type | ET-RG214 |
| Impedance | 50 Ohms |
| Inner Conductor Type | Stranded |
| Inner Conductor Material and Plating | Copper, Silver |
| Dielectric Type | PE |
| Number of Shields | 2 |
| Shield Layer 1 | Silver Plated Copper Braid |
| Shield Layer 2 | Silver Plated Copper Braid |
| Jacket Material | PVC, Black |
| Jacket Diameter | 0.425 in [10.8 mm] |
| Repeated Minimum Bend Radius | 1.6 in [40.64 mm] |

Click the following link (or enter part number in “SEARCH” on website) to obtain additional part information including price, inventory and certifications: N Male to N Male Cable 84 Inch Length Using ET-RG214 Coax ET26468

8th Floor, Building 1, Yongfu Science and Technology Center Industrial Park,
Nanzha District 5, Humen,523900, Dongguan, Guangdong, China.

Webstie:www.ebeestock.com Email:sales@ebeestock.com

© 2022 Ebeestock Enterprises All Rights Reserved

N Male to N Male Cable 84 Inch Length Using ET-RG214 Coax

# RF Cable Assemblies Technical Data Sheet ET26468

## Connectors

| Description | Connector 1 | Connector 2 |
|---|---|---|
| Type | N Male | N Male |
| Specification | MIL-STD-348A | MIL-STD-348A |
| Impedance | 50 Ohms | 50 Ohms |
| Contact Material and Plating | Brass, Gold | Brass, Gold |
| Contact Plating Specification | 30 µin minimum | 30 µin minimum |
| Dielectric Type | PTFE | PTFE |
| Body Material and Plating | Brass, Nickel | Brass, Nickel |
| Body Plating Specification | 100 µin minimum | 100 µin minimum |
| Coupling Nut Material and Plating | Brass, Nickel | Brass, Nickel |
| Coupling Nut Plating Specification | 100 µin minimum | 100 µin minimum |

## Environmental Specifications

**Temperature**

Operating Range -20 to +80 deg C

## Compliance Certifications (see product page for current document)

## Plotted and Other Data

Notes:

- Values at 25°C, sea level.

Click the following link (or enter part number in “SEARCH” on website) to obtain additional part information including price, inventory and certifications: N Male to N Male Cable 84 Inch Length Using ET-RG214 Coax ET26468

8th Floor, Building 1, Yongfu Science and Technology Center Industrial Park,
Nanzha District 5, Humen,523900, Dongguan, Guangdong, China.

Webstie:www.ebeestock.com Email:sales@ebeestock.com

© 2022 Ebeestock Enterprises All Rights Reserved

N Male to N Male Cable 84 Inch Length Using ET-RG214 Coax

# RF Cable Assemblies Technical Data Sheet ET26468

## How to Order

Part Number Configuration: **ET3062 - xx uu**

- ET3062 — Base Number
- xx — Length
- uu — Unit of Measure:
  - cm = Centimeters
  - <blank> = Inches

Example: ET3062-12 = 12 inches long cable
ET3062-100cm = 100 cm long cable

N Male to N Male Cable 84 Inch Length Using ET-RG214 Coax from Ebeestock Enterprises has same day shipment for domestic and International orders. Our RF, microwave and millimeter wave products maintain a 99.4% availability and are part of the broadest selection in the industry.

Click the following link (or enter part number in “SEARCH” on website) to obtain additional part information including price, inventory and certifications: N Male to N Male Cable 84 Inch Length Using ET-RG214 Coax ET26468

**URL:** https://www.ebeestock.com/n-male-to-n-male-cable-12-inch-length-using-rg218-coax-rohs-0026460

The information contained in this document is accurate to the best of our knowledge and representative of the part described herein. It may be necessary to make modifications to the part and/or the documentation of the part, in order to implement improvements. Ebeestock reserves the right to make such changes as required. Unless otherwise stated, all specifications are nominal. Ebeestock does not make any representation or warranty regarding the suitability of the part described herein for any particular purpose, and Ebeestock does not assume any liability arising out of the use of any part or documentation.

8th Floor, Building 1, Yongfu Science and Technology Center Industrial Park,
Nanzha District 5, Humen,523900, Dongguan, Guangdong, China.

Webstie:www.ebeestock.com Email:sales@ebeestock.com

© 2022 Ebeestock Enterprises All Rights Reserved

© 2022 Ebeestock Enterprises All Rights Reserved

www.ebeestock.com

| REVISIONS | | | |
|---|---|---|---|
| REV. | DESCRIPTION | DATE | APPROVED |
| A | INITIAL RELEASE | 10/08/19 | S.ELLIS |

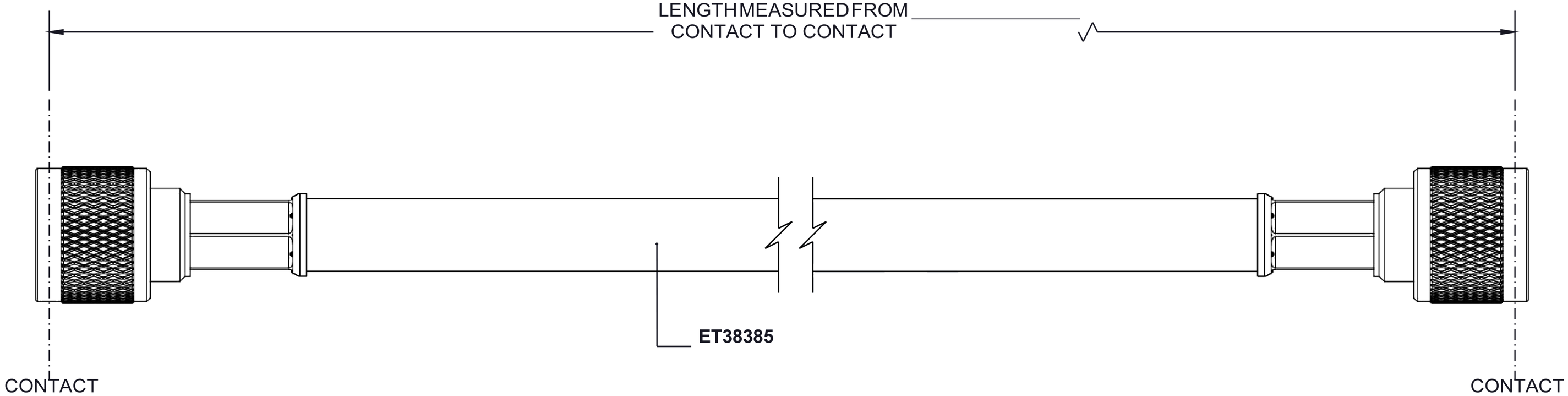


**N MALE**

**N MALE**

THESE COMMODITIES, TECHNOLOGY OR SOFTWARE WERE EXPORTED FROM THE UNITED STATES IN ACCORDANCE WITH THE EXPORT ADMINISTRATION REGULATIONS. DIVERSION CONTRARY TO U.S. LAW PROHIBITED.

UNLESS OTHERWISE SPECIFIED
LEADING DIMENSIONS ARE INCHES
DIMENSIONS IN [ ] ARE MILLIMETERS

TOLERANCES:

| | | |
|---|---|---|
| .X=± .2 | [5.08] | FRACTIONS |
| .XX=± .01 | [ .25 ] | ± 1/32 |
| .XXX=± .005 | [ .13 ] | ANGLES ± 1° |

ALL DIMENSIONS SHOWN
ARE FOR REFERENCE ONLY.

THIRD-ANGLE PROJECTION

PASTERNACK
an INFINITE brand
8th Floor, Building 1, Yongfu Science and Technology
Center Industrial Park
P.O.Box 16759, Irvine, CA 92623.
Phone: 1.949.261.1920 | 1.866.727.8376
Fax: 1.949.261.7451
| e-mail: sales@Ebeestock.com

THE INFORMATION AND DESIGN IN THIS DOCUMENT IS THE PROPERTY OF Ebeestock CORPORATION. ALL RIGHTS RESERVED.

SHEET 1 OF 1

SCALE N/A

| SIZE | CAGE CODE | DRAWN BY | PART NUMBER | REV |
|---|---|---|---|---|
| A | 53919 | K.DANG | ET3062 | A |



T-Rev.B