N Male to N Male Cable 12 Inch Length Using 75 Ohm ET-RG11 C
oax

RF Cable Assemblies Technical Data Sheet ET26686

Configuration

- Connector 1: N Male
- Connector 2: N Male
- Cable Type: ET-RG11

Features

- Max Frequency 1 GHz
- Shielding Effectivity > 45 dB
- 65.9% Phase Velocity
- PVC Jacket

Applications

- General Purpose
- Laboratory Use

Description

Ebeestock's ET26686 type N male to type N male 12 inch cable using 75 ohm ET-RG11 coax is part of our full line of RF components available for same-day shipping. Ebeestock's flexible RF cable assemblies are ideal for applications where tight bends and flexure are required. This Ebeestock type N to type N cable assembly has a male to male gender configuration with 75 ohm flexible ET-RG11 coax. The ET26686 type N male to type N male cable assembly operates to 1 GHz.

Custom versions of most RF cable assemblies can be built and shipped same day. Custom cable assembly lengths can be obtained by specifying the desired length on the web site at time of order or by contacting a sales representative. Other available RF cable assembly value added services include connector orientation or clocking, heat shrink booting and custom labeling. RF testing can also be performed to document the electrical performance of your cable assembly.

Electrical Specifications

Description	Minimum	Typical	Maximum	Units
Frequency Range	DC		1,000	MHz
VSWR			1.4:1	
Velocity of Propagation		65.9		%
RF Shielding	45			dB
Capacitance		20.5 [67.26]		pF/ft [pF/m]

Specifications by Frequency

Description	F1	F2	F3	F4	F5	Units
Frequency	50	100	250	500	1,000	MHz
VSWR (Max.)	1.4:1	1.4:1	1.4:1	1.4:1	1.4:1	
Return Loss (Max.)	15.56	15.563	15.563	15.563	15.563	dB

Click the following link (or enter part number in "SEARCH" on website) to obtain additional part information including price, inventory and certifications: N Male to N Male Cable 12 Inch Length Using 75 Ohm ET-RG11 Coax ET26686

8th Floor, Building 1, Yongfu Science and Technology Center Industrial Park,
Nanzha District 5, Humen,523900, Dongguan, Guangdong, China.

Webstie:www.ebeestock.com Email:sales@ebeestock.com

© 2022 Ebeestock Enterprises All Rights Reserved

N Male to N Male Cable 12 Inch Length Using 75 Ohm ET-RG11 C
oax

RF Cable Assemblies Technical Data Sheet ET26686

Mechanical Specifications

Cable Assembly

Length*	12 in [304.8 mm]
Diameter	0.827 in [21.01 mm]
Weight	0.347 lbs [157.4 g]

Cable

Cable Type	ET-RG11
Impedance	75 Ohms
Inner Conductor Type	Stranded
Inner Conductor Material and Plating	Copper, Tin
Dielectric Type	PE
Number of Shields	1
Shield Layer 1	Copper
Jacket Material	PVC, Black
Jacket Diameter	0.405 in [10.29 mm]
One Time Minimum Bend Radius	4.5 in [114.3 mm]

Connectors

Description	Connector 1	Connector 2
Type	N Male	N Male
Specification	MIL-STD-348A	MIL-STD-348A
Impedance	50 Ohms	50 Ohms
Contact Material and Plating	Brass, Gold	Brass, Gold
Contact Plating Specification	30µ in. minimum	30µ in. minimum
Dielectric Type	Teflon	Teflon
Body Material and Plating	Brass, Nickel	Brass, Nickel
Body Plating Specification	100µ in. minimum	100µ in. minimum

Compliance Certifications (see product page for current document)

Plotted and Other Data

Notes:

- Values at 25°C, sea level.

Click the following link (or enter part number in “SEARCH” on website) to obtain additional part information including price, inventory and certifications: N Male to N Male Cable 12 Inch Length Using 75 Ohm ET-RG11 Coax ET26686

8th Floor, Building 1, Yongfu Science and Technology Center Industrial Park,
Nanzha District 5, Humen,523900, Dongguan, Guangdong, China.

Webstie:www.ebeestock.com Email:sales@ebeestock.com

© 2022 Ebeestock Enterprises All Rights Reserved

N Male to N Male Cable 12 Inch Length Using 75 Ohm ET-RG11 C
oax

RF Cable Assemblies Technical Data Sheet ET26686

How to Order

Part Number Configuration: **ET33479 - xx uu**

- ET33479 — Base Number
- xx — Length
- uu — Unit of Measure:
  - cm = Centimeters
  - <blank> = Inches

Example: ET26686 = 12 inches long cable
ET33479-100cm = 100 cm long cable

N Male to N Male Cable 12 Inch Length Using 75 Ohm ET-RG11 Coax from Ebeestock Enterprises has same day shipment for domestic and International orders. Our RF, microwave and millimeter wave products maintain a 99.4% availability and are part of the broadest selection in the industry.

Click the following link (or enter part number in “SEARCH” on website) to obtain additional part information including price, inventory and certifications: N Male to N Male Cable 12 Inch Length Using 75 Ohm ET-RG11 Coax ET26686

URL: https://www.ebeestock.com/n-male-to-n-male-cable-12-inch-length-using-75-ohm-rg11-coax-0026686

The information contained in this document is accurate to the best of our knowledge and representative of the part described herein. It may be necessary to make modifications to the part and/or the documentation of the part, in order to implement improvements. Ebeestock reserves the right to make such changes as required. Unless otherwise stated, all specifications are nominal. Ebeestock does not make any representation or warranty regarding the suitability of the part described herein for any particular purpose, and Ebeestock does not assume any liability arising out of the use of any part or documentation.

8th Floor, Building 1, Yongfu Science and Technology Center Industrial Park,
Nanzha District 5, Humen,523900, Dongguan, Guangdong, China.

Webstie:www.ebeestock.com Email:sales@ebeestock.com

© 2022 Ebeestock Enterprises All Rights Reserved

© 2022 Ebeestock Enterprises All Rights Reserved

www.ebeestock.com

REVISIONS			
REV.	DESCRIPTION	DATE	APPROVED
A	PCR ET33479	5/19/2020	S.ELLIS

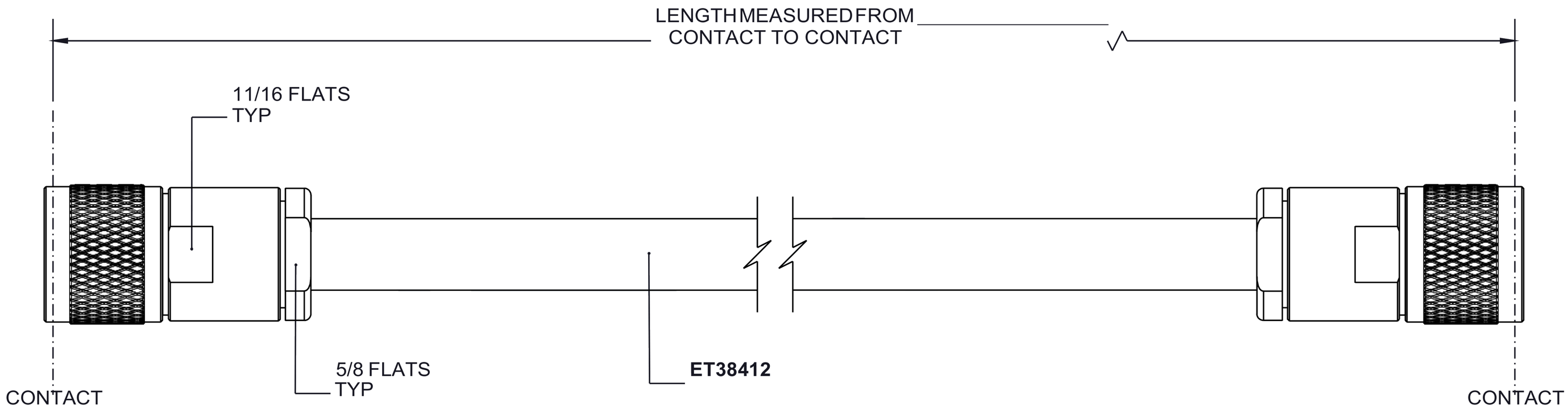

N MALE

N MALE

THESE COMMODITIES, TECHNOLOGY OR SOFTWARE WERE EXPORTED FROM THE UNITED STATES IN ACCORDANCE WITH THE EXPORT ADMINISTRATION REGULATIONS. DIVERSION CONTRARY TO U.S. LAW PROHIBITED.

UNLESS OTHERWISE SPECIFIED
LEADING DIMENSIONS ARE INCHES
DIMENSIONS IN [ ] ARE MILLIMETERS

TOLERANCES:

.X = ±.2 [5.08]
.XX = ± .02 [.51]
.XXX = ±.005 [.13]

FRACTIONS
± 1/32
ANGLES ± 1°

CABLE LENGTH (L) TOLERANCES:

L ≤ 12 [305] = +1 [25] / -0
12 [305] < L ≤ 60 [1524] = +2 [51] / -0
60 [1524] < L ≤ 120 [3048] = +4 [102] / -0
120 [3048] < L ≤ 300 [7620] = +6 [152] / -0
300 [7620] < L = +5%L / -0

ALL DIMENSIONS SHOWN
ARE FOR REFERENCE ONLY.

ebeestock
Ebeestock.com
8th Floor, Building 1, Yongfu Science
and Technology Center Industrial Park,
Nanzha District 5, Humen,523900, Dongguan, Guangdong, China.
Webstie: www.ebeestock.com **Email:** sales@ebeestock.com

THIRD-ANGLE PROJECTION

THE INFORMATION AND
DESIGN IN THIS DOCUMENT
IS THE PROPERTY OF
Ebeestock CORPORATION ALL
RIGHTS RESERVED.

SHEET	OF
1	1

SCALE N/A

SIZE	CAGE CODE	DRAWN BY	ITEM NO.	REV
A	53919	K.DANG	ET33479	A