N Male to N Female Cable 36 Inch Length Using ET-RG225 Coax

# RF Cable Assemblies Technical Data Sheet ET26826

## Configuration

- Connector 1: N Male
- Connector 2: N Female
- Cable Type: ET-RG225

## Features

- Max Frequency 400 MHz
- Double Shielded
- PTFE (FG) Jacket

## Applications

- General Purpose
- Laboratory Use

### Description

Ebeestock's ET26826 type N male to type N female 36 inch cable using ET-RG225 coax is part of our full line of RF components available for same-day shipping. Ebeestock's flexible RF cable assemblies are ideal for applications where tight bends and flexure are required. This Ebeestock type N to type N cable assembly has a male to female gender configuration with 50 ohm flexible ET-RG225 coax. The ET26826 type N male to type N female cable assembly operates to 400 MHz. The double shielding of this Ebeestock cable assembly provides excellent shielding effectiveness.

Custom versions of most RF cable assemblies can be built and shipped same day. Custom cable assembly lengths can be obtained by specifying the desired length on the web site at time of order or by contacting a sales representative. Other available RF cable assembly value added services include connector orientation or clocking, heat shrink booting and custom labeling. RF testing can also be performed to document the electrical performance of your cable assembly.

### Electrical Specifications

| Description | Minimum | Typical | Maximum | Units |
|---|---|---|---|---|
| Frequency Range | DC | | 400 | MHz |
| Capacitance | | 32.4 [106.3] | | pF/ft [pF/m] |

### Specifications by Frequency

| Description | F1 | F2 | F3 | F4 | F5 | Units |
|---|---|---|---|---|---|---|
| Frequency | 50 | 100 | 250 | 500 | 1,000 | MHz |
| Insertion Loss (Typ.) | 0.219 | 0.238 | 0.294 | | | dB |

Click the following link (or enter part number in "SEARCH" on website) to obtain additional part information including price, inventory and certifications: N Male to N Female Cable 36 Inch Length Using ET-RG225 Coax ET26826

8th Floor, Building 1, Yongfu Science and Technology Center Industrial Park,
Nanzha District 5, Humen,523900, Dongguan, Guangdong, China.

Webstie:www.ebeestock.com Email:sales@ebeestock.com

© 2022 Ebeestock Enterprises All Rights Reserved

N Male to N Female Cable 36 Inch Length Using ET-RG225 Coax

# RF Cable Assemblies Technical Data Sheet ET26826

## Mechanical Specifications

### Cable Assembly

| | |
|---|---|
| Length* | 36 in [914.4 mm] |
| Diameter | 0.79 in [20.07 mm] |
| Weight | 0.734 lbs [332.94 g] |

### Cable

| | |
|---|---|
| Cable Type | ET-RG225 |
| Impedance | 50 Ohms |
| Inner Conductor Type | Stranded |
| Inner Conductor Material and Plating | Copper, Silver |
| Dielectric Type | PTFE |
| Number of Shields | 2 |
| Shield Layer 1 | Silver Plated Copper Braid |
| Shield Layer 2 | Silver Plated Copper Braid |
| Jacket Material | PTFE (FG), Tan |
| Jacket Diameter | 0.43 in [10.92 mm] |

### Connectors

| Description | Connector 1 | Connector 2 |
|---|---|---|
| Type | N Male | N Female |
| Specification | MIL-STD-348A | MIL-STD-348A |
| Impedance | 50 Ohms | 50 Ohms |
| Contact Material and Plating | Brass, Gold | Phosphor Bronze, Gold |
| Contact Plating Specification | 30µ in. minimum | 30µ in. minimum |
| Dielectric Type | Teflon | Teflon |
| Body Material and Plating | Brass, Nickel | Brass, Nickel |
| Body Plating Specification | 100µ in. minimum | 100µ in. minimum |
| Coupling Nut Material and Plating | Brass, Nickel | |
| Coupling Nut Plating Specification | 100µ in. minimum | |

Mechanical Specification Notes:
*All cable assemblies have a length tolerance of 1.5% or ± 3/8”, whichever is greater.

## Compliance Certifications (see product page for current document)

## Plotted and Other Data

Notes:
- Values at 25°C, sea level.

Click the following link (or enter part number in “SEARCH” on website) to obtain additional part information including price, inventory and certifications: N Male to N Female Cable 36 Inch Length Using ET-RG225 Coax ET26826

8th Floor, Building 1, Yongfu Science and Technology Center Industrial Park,
Nanzha District 5, Humen,523900, Dongguan, Guangdong, China.

Webstie:www.ebeestock.com Email:sales@ebeestock.com

© 2022 Ebeestock Enterprises All Rights Reserved

N Male to N Female Cable 36 Inch Length Using ET-RG225 Coax

# RF Cable Assemblies Technical Data Sheet ET26826

## How to Order

Part Number Configuration: **ET33728 - xx uu**

- uu — Unit of Measure:
  - cm = Centimeters
  - <blank> = Inches
- xx — Length
- ET33728 — Base Number

Example: ET33728-12 = 12 inches long cable
ET33728-100cm = 100 cm long cable

N Male to N Female Cable 36 Inch Length Using ET-RG225 Coax from Ebeestock Enterprises has same day shipment for domestic and International orders. Our RF, microwave and millimeter wave products maintain a 99.4% availability and are part of the broadest selection in the industry.

Click the following link (or enter part number in “SEARCH” on website) to obtain additional part information including price, inventory and certifications: N Male to N Female Cable 36 Inch Length Using ET-RG225 Coax ET26826

**URL:** https://www.ebeestock.com/n-male-to-n-female-cable-12-inch-length-using-rg225-coax-0026824

The information contained in this document is accurate to the best of our knowledge and representative of the part described herein. It may be necessary to make modifications to the part and/or the documentation of the part, in order to implement improvements. Ebeestock reserves the right to make such changes as required. Unless otherwise stated, all specifications are nominal. Ebeestock does not make any representation or warranty regarding the suitability of the part described herein for any particular purpose, and Ebeestock does not assume any liability arising out of the use of any part or documentation.

8th Floor, Building 1, Yongfu Science and Technology Center Industrial Park,
Nanzha District 5, Humen,523900, Dongguan, Guangdong, China.

Webstie:www.ebeestock.com Email:sales@ebeestock.com

© 2022 Ebeestock Enterprises All Rights Reserved

© 2022 Ebeestock Enterprises All Rights Reserved

www.ebeestock.com

| REVISIONS | | | |
|---|---|---|---|
| REV. | DESCRIPTION | DATE | APPROVED |
| A | INITIAL RELEASE | 07/23/19 | S.ELLIS |

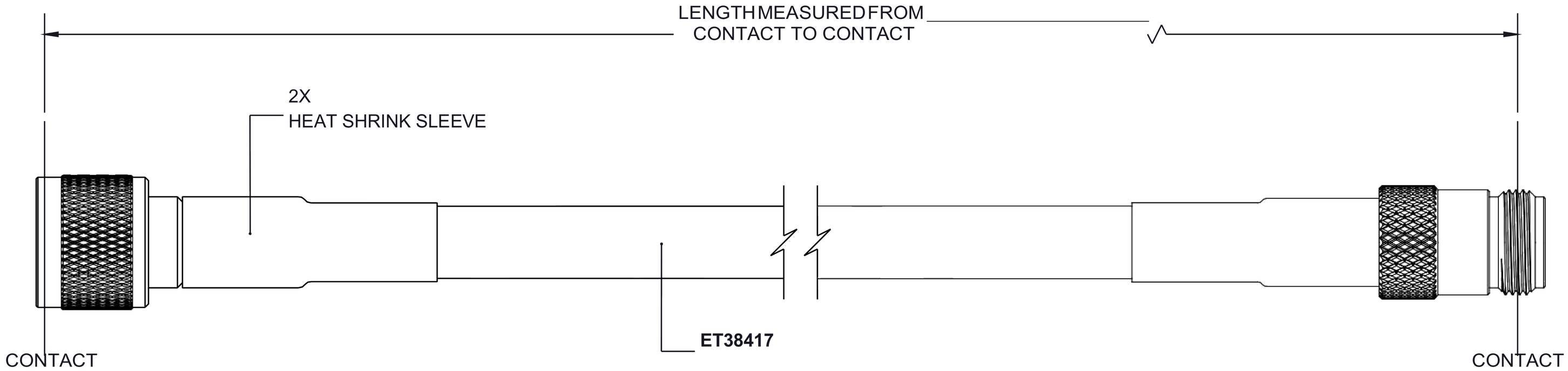


**N MALE**

**N FEMALE**

THESE COMMODITIES, TECHNOLOGY OR SOFTWARE WERE EXPORTED FROM THE UNITED STATES IN ACCORDANCE WITH THE EXPORT ADMINISTRATION REGULATIONS. DIVERSION CONTRARY TO U.S. LAW PROHIBITED.

UNLESS OTHERWISE SPECIFIED
LEADING DIMENSIONS ARE INCHES
DIMENSIONS IN [ ] ARE MILLIMETERS

TOLERANCES:

| | | |
|---|---|---|
| .X=± .2 | [5.08] | FRACTIONS |
| .XX=± .01 | [ .25 ] | ± 1/32 |
| .XXX=± .005 | [ .13 ] | ANGLES ± 1° |

ALL DIMENSIONS SHOWN
ARE FOR REFERENCE ONLY.

THIRD-ANGLE PROJECTION

PASTERNACK
an INFINITE brand
8th Floor, Building 1, Yongfu Science and Technology
Center Industrial Park
P.O.Box 16759, Irvine, CA 92623.
Phone: 1.949.261.1920 | 1.866.727.8376
Fax: 1.949.261.7451
e-mail: sales@Ebeestock.com

THE INFORMATION AND DESIGN IN THIS DOCUMENT IS THE PROPERTY OF Ebeestock CORPORATION. ALL RIGHTS RESERVED.

SHEET 1 OF 1

SCALE N/A

| SIZE | CAGE | DRAWN BY | PART NUMBER | REV |
|---|---|---|---|---|
| A | 53919 | K.DANG | ET33728 | A |



T-Rev.B