COMPONENTS	IMPEDANCE
N MALE	50 OHM
N FEMALE BULKHEAD	50 OHM
PE-SR405AL	50 OHM

Standard Lengths	
-12	12"
-24	24"
-36	36"
-48	48"
-60	60"
-XXX	Custom Length in inches

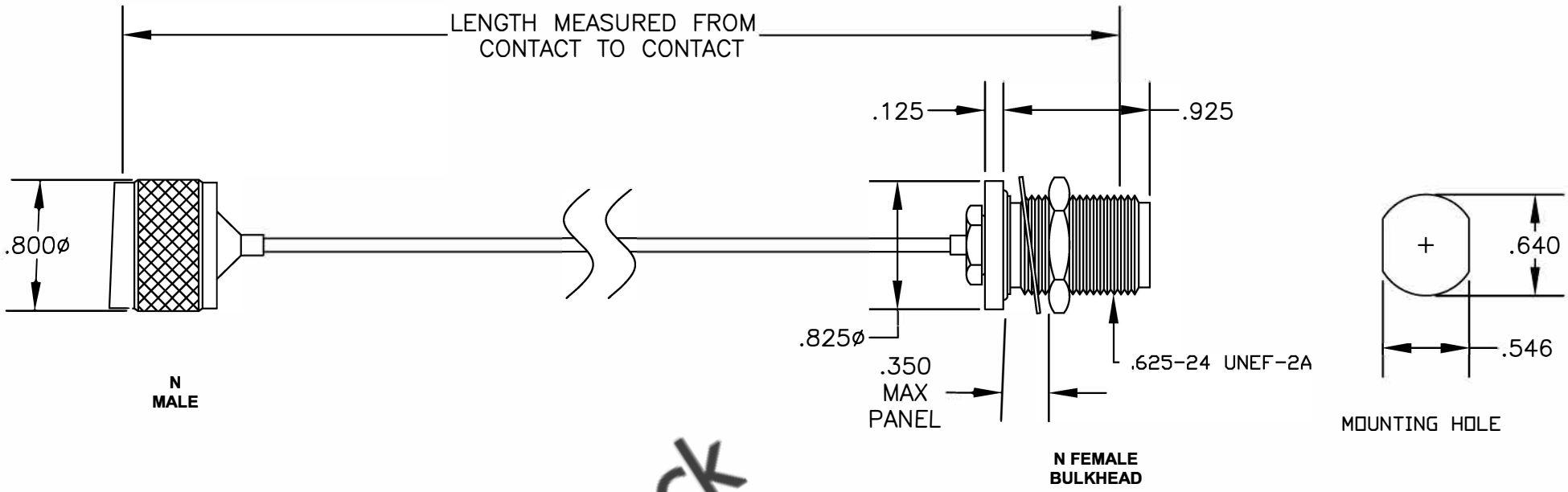

8TH FLOOR, BUILDING 1, YONGFU SCIENCE AND TECHNOLOGY CENTER INDUSTRIAL PARK, NANZHA DISTRICT 5, HUMEN,523900,DONGGUAN, GUANGDONG, CHINA

ebeestock

WEBSITE: www.ebeestock.com
EMAIL: sales@ebeestock.com

COAXIAL & FIBER OPTICS

ET27024

DES. CABLE ASSEMBLY, PE-SR405AL, N MALE TO N FEMALE BULKHEAD

SIZE A	FSCM NO. 53919	CAD FILE 042109	SCALE N/A		127

NOTES:
1. UNLESS OTHERWISE SPECIFIED ALL DIMENSIONS ARE NOMINAL.
2. ALL SPECIFICATIONS ARE SUBJECT TO CHANGE WITHOUT NOTICE AT ANY TIME.
3. DIMENSIONS ARE IN INCHES.
4. LENGTH TOLERANCE IS ± 1.5% OR ±3/8", WHICHEVER IS GREATER.