N Male to N Female Bulkhead Cable 24 Inch Length Using ET-RG 225 Coax , LF Solder

RF Cable Assemblies Technical Data Sheet ET27055

Configuration

- Connector 1: N Male
- Connector 2: N Female Bulkhead
- Cable Type: ET-RG225

Features

- Max Frequency 400 MHz
- Double Shielded
- PTFE (FG) Jacket

Applications

- General Purpose
- Laboratory Use

Description

Ebeestock's ET27055 type N male to type N female bulkhead 24 inch cable using ET-RG225 coax is part of our full line of RF components available for same-day shipping. Ebeestock's flexible RF cable assemblies are ideal for applications where tight bends and flexure are required. This Ebeestock type N to type N cable assembly has a male to female gender configuration with 50 ohm flexible ET-RG225 coax. The ET27055 type N male to type N female cable assembly operates to 400 MHz. Our RF cable assembly with type N bulkhead interface allows designers to create external connections on their product enclosures, and can be used in a variety of other rack mount and panel mount applications. The double shielding of this Ebeestock cable assembly provides excellent shielding effectiveness.

Custom versions of most RF cable assemblies can be built and shipped same day. Custom cable assembly lengths can be obtained by specifying the desired length on the web site at time of order or by contacting a sales representative. Other available RF cable assembly value added services include connector orientation or clocking, heat shrink booting and custom labeling. RF testing can also be performed to document the electrical performance of your cable assembly.

Electrical Specifications

Description	Minimum	Typical	Maximum	Units
Frequency Range	DC		400	MHz
VSWR			1.4:1	
Capacitance		32.4 [106.3]		pF/ft [pF/m]

Click the following link (or enter part number in "SEARCH" on website) to obtain additional part information including price, inventory and certifications: N Male to N Female Bulkhead Cable 24 Inch Length Using ET-RG225 Coax , LF Solder ET27055

8th Floor, Building 1, Yongfu Science and Technology Center Industrial Park,
Nanzha District 5, Humen,523900, Dongguan, Guangdong, China.

Webstie:www.ebeestock.com Email:sales@ebeestock.com

© 2022 Ebeestock Enterprises All Rights Reserved

N Male to N Female Bulkhead Cable 24 Inch Length Using ET-RG 225 Coax , LF Solder

RF Cable Assemblies Technical Data Sheet ET27055

Specifications by Frequency

Description	F1	F2	F3	F4	F5	Units
Frequency	50	100	250	500	1,000	MHz
Insertion Loss (Typ.)	0.213	0.225	0.263			dB
VSWR (Max.)	1.4:1	1.4:1	1.4:1	1.4:1	1.4:1	
Return Loss (Max.)	15.56	15.563	15.563	15.563	15.563	dB

Mechanical Specifications

Cable Assembly

Length*	24 in [609.6 mm]
Diameter	0.815 in [20.7 mm]
Weight	0.565 lbs [256.28 g]

Cable

Cable Type	ET-RG225
Impedance	50 Ohms
Inner Conductor Type	Stranded
Inner Conductor Material and Plating	Copper, Silver
Dielectric Type	PTFE
Number of Shields	2
Shield Layer 1	Silver Plated Copper Braid
Shield Layer 2	Silver Plated Copper Braid
Jacket Material	PTFE (FG), Tan
Jacket Diameter	0.43 in [10.92 mm]

Click the following link (or enter part number in “SEARCH” on website) to obtain additional part information including price, inventory and certifications: N Male to N Female Bulkhead Cable 24 Inch Length Using ET-RG225 Coax , LF Solder ET27055

8th Floor, Building 1, Yongfu Science and Technology Center Industrial Park,
Nanzha District 5, Humen,523900, Dongguan, Guangdong, China.

Webstie:www.ebeestock.com Email:sales@ebeestock.com

© 2022 Ebeestock Enterprises All Rights Reserved

N Male to N Female Bulkhead Cable 24 Inch Length Using ET-RG 225 Coax , LF Solder

RF Cable Assemblies Technical Data Sheet ET27055

Connectors

Description	Connector 1	Connector 2
Type	N Male	N Female Bulkhead
Specification	MIL-STD-348A	MIL-STD-348A
Impedance	50 Ohms	50 Ohms
Contact Material and Plating	Brass, Gold	Brass, Gold
Contact Plating Specification	30µ in. minimum	30µ in. minimum
Dielectric Type	Teflon	Teflon
Body Material and Plating	Brass, Nickel	Brass, Nickel
Body Plating Specification	100µ in. minimum	100µ in. minimum
Coupling Nut Material and Plating	Brass, Nickel	
Coupling Nut Plating Specification	100µ in. minimum	

Mechanical Specification Notes:
*All cable assemblies have a length tolerance of 1.5% or ± 3/8”, whichever is greater.

Compliance Certifications (see product page for current document)

Plotted and Other Data

Notes:

- Values at 25°C, sea level.

Click the following link (or enter part number in “SEARCH” on website) to obtain additional part information including price, inventory and certifications: N Male to N Female Bulkhead Cable 24 Inch Length Using ET-RG225 Coax , LF Solder ET27055

8th Floor, Building 1, Yongfu Science and Technology Center Industrial Park,
Nanzha District 5, Humen,523900, Dongguan, Guangdong, China.

Webstie:www.ebeestock.com Email:sales@ebeestock.com

© 2022 Ebeestock Enterprises All Rights Reserved

N Male to N Female Bulkhead Cable 24 Inch Length Using ET-RG 225 Coax , LF Solder

RF Cable Assemblies Technical Data Sheet ET27055

How to Order

Part Number Configuration: **ET34194LF - xx uu**

- ET34194LF: Base Number
- xx: Length
- uu: Unit of Measure:
  - cm = Centimeters
  - <blank> = Inches

Example: ET34194LF-12 = 12 inches long cable
ET34194LF-100cm = 100 cm long cable

N Male to N Female Bulkhead Cable 24 Inch Length Using ET-RG225 Coax , LF Solder from Ebeestock Enterprises has same day shipment for domestic and International orders. Our RF, microwave and millimeter wave products maintain a 99.4% availability and are part of the broadest selection in the industry.

Click the following link (or enter part number in “SEARCH” on website) to obtain additional part information including price, inventory and certifications: N Male to N Female Bulkhead Cable 24 Inch Length Using ET-RG225 Coax , LF Solder ET27055

URL: https://www.ebeestock.com/n-male-to-n-female-bulkhead-cable-12-inch-length-using-rg225-coax-lf-solder-0027054

The information contained in this document is accurate to the best of our knowledge and representative of the part described herein. It may be necessary to make modifications to the part and/or the documentation of the part, in order to implement improvements. Ebeestock reserves the right to make such changes as required. Unless otherwise stated, all specifications are nominal. Ebeestock does not make any representation or warranty regarding the suitability of the part described herein for any particular purpose, and Ebeestock does not assume any liability arising out of the use of any part or documentation.

8th Floor, Building 1, Yongfu Science and Technology Center Industrial Park,
Nanzha District 5, Humen,523900, Dongguan, Guangdong, China.

Webstie:www.ebeestock.com Email:sales@ebeestock.com

© 2022 Ebeestock Enterprises All Rights Reserved

© 2022 Ebeestock Enterprises All Rights Reserved

www.ebeestock.com

REVISIONS			
REV.	DESCRIPTION	DATE	APPROVED
A	INITIAL RELEASE	07/23/19	S.ELLIS

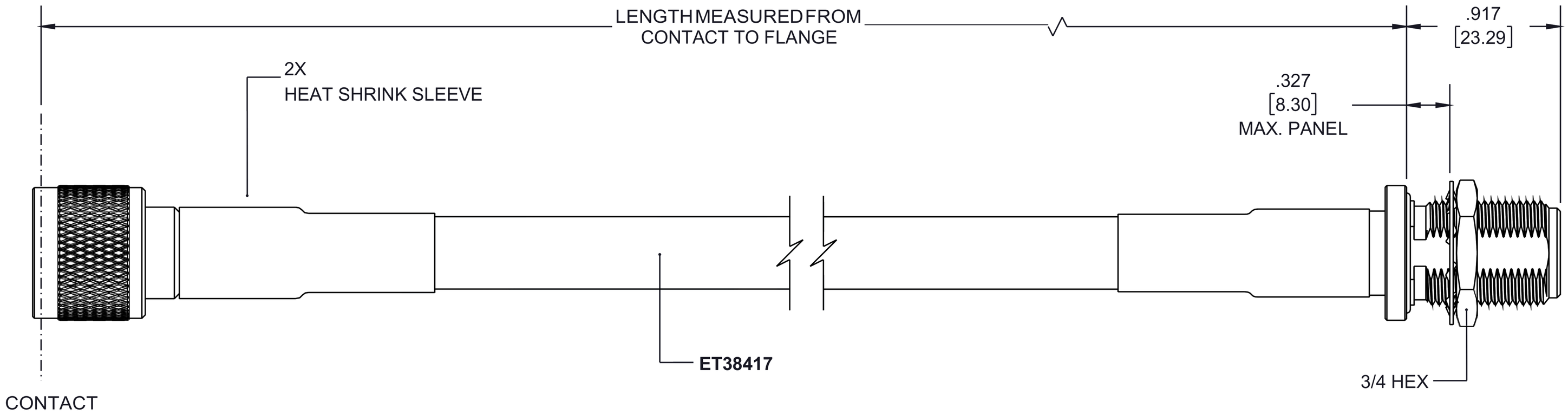

N MALE

N FEMALE BULKHEAD

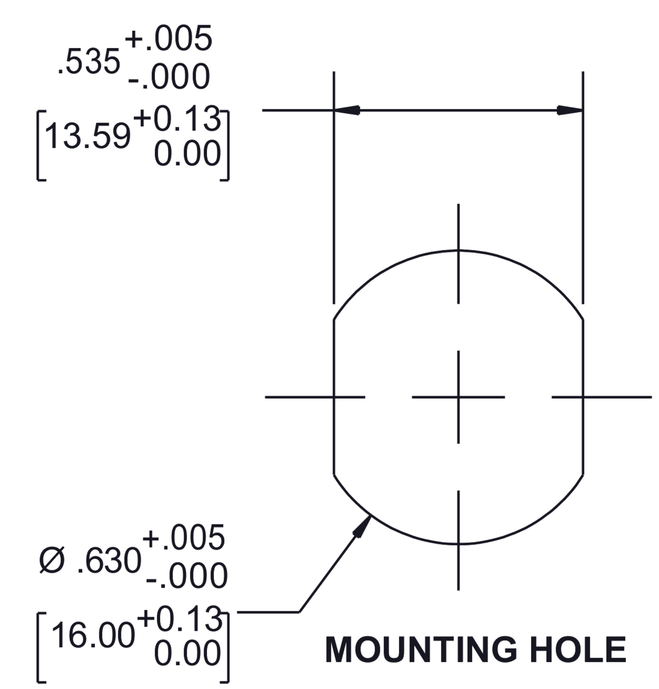

MOUNTING HOLE

UNLESS OTHERWISE SPECIFIED
LEADING DIMENSIONS ARE INCHES
DIMENSIONS IN [ ] ARE MILLIMETERS

TOLERANCES:

.X=± .2	[5.08]	FRACTIONS
.XX=± .01	[.25]	± 1/32
.XXX=± .005	[.13]	ANGLES ± 1°

ALL DIMENSIONS SHOWN ARE FOR REFERENCE ONLY.

THIRD ANGLE PROJECTION

PASTERNACK
an INFINITE brand
8th Floor, Building 1, Yongfu Science and Technology Center Industrial Park
P.O.Box 16759, Irvine, CA 92623.
Phone: 1.949.261.1920 | 1.866.727.8376
Fax: 1.949.261.7451
e-mail: sales@Ebeestock.com

THE INFORMATION AND DESIGN IN THIS DOCUMENT IS THE PROPERTY OF Ebeestock CORPORATION. ALL RIGHTS RESERVED.

SHEET 1 OF 1

SCALE N/A

SIZE	CAGE	DRAWN BY	PART NUMBER	REV
A	53919	K.DANG	ET34194LF	A

THESE COMMODITIES, TECHNOLOGY OR SOFTWARE WERE EXPORTED FROM THE UNITED STATES IN ACCORDANCE WITH THE EXPORT ADMINISTRATION REGULATIONS. DIVERSION CONTRARY TO U.S. LAW PROHIBITED.

T-Rev.B