COMPONENTS	IMPEDANCE
N MALE RIGHT ANGLE	50 OHM
N FEMALE BULKHEAD	50 OHM
RG8A/U	52 OHM

Standard Lengths

-12	12"
-24	24"
-36	36“
-48	48"
-60	60"
-XXX	Custom Length in inches

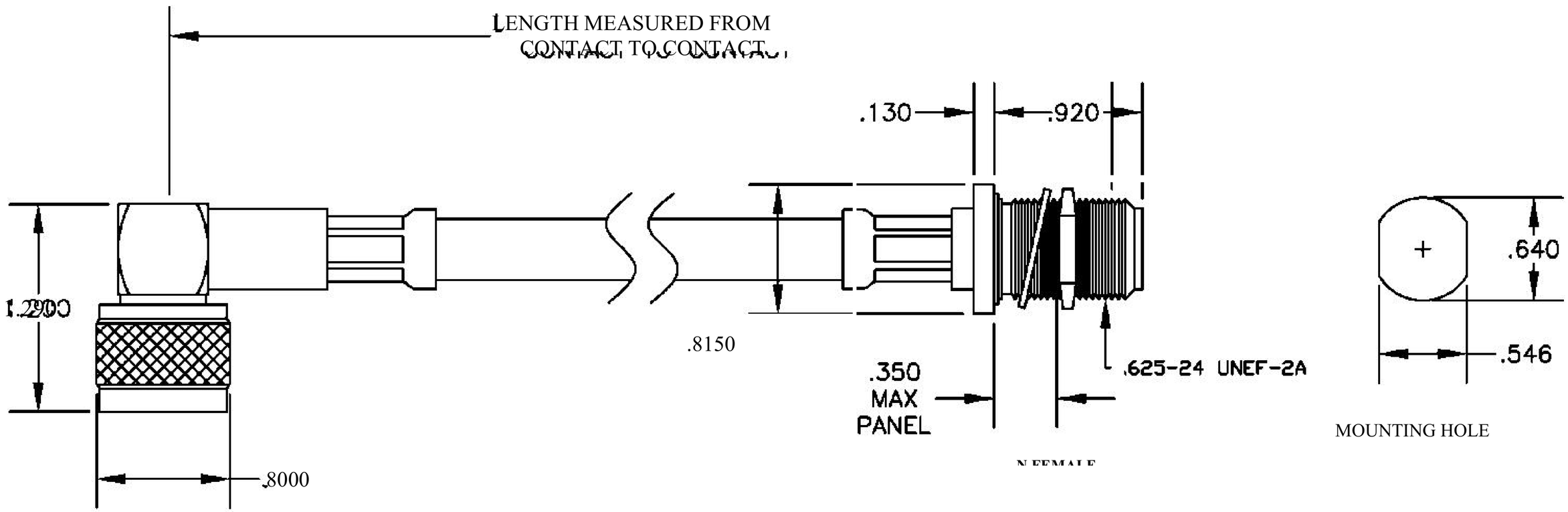

N MALE
RIGHT ANGLE

8th Floor, Building 1, Yongfu Science and Technology Center Industrial Park, Nanzha District 5, Humen,523900, Dongguan, Guangdong, China.

Website: www.ebeestock.com
Email: sales@ebeestock.com

COAXIAL & FIBER OPTICS

DWG TITLE	DES_
ET27151	n-male-right-angle-to-n-female-bulkhead-cable-12-inch-length-using-rg8-coax-rohs-0027150

SIZE A | **FSCM NO. 53919** | CAD FILE 073102 | SCALE N/A | | 127

NOTES:
1. UNLESS OTHERWISE SPECIFIED ALL DIMENSIONS ARE NOMINAL.
2. ALL SPECIFICATIONS ARE SUBJECT TO CHANGE WITHOUT NOTICE AT ANY TIME.