N Male Right Angle to N Male Right Angle Cable 12 Inch Lengt
h Using ET-RG316 Coax

# RF Cable Assemblies Technical Data Sheet ET27228

## Configuration

- Connector 1: N Male Right Angle
- Connector 2: N Male Right Angle
- Cable Type: ET-RG316

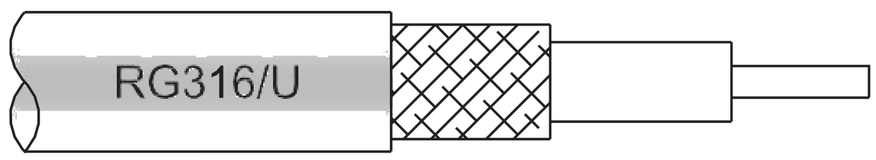


## Features

- Max Frequency 3 GHz
- FEP Jacket

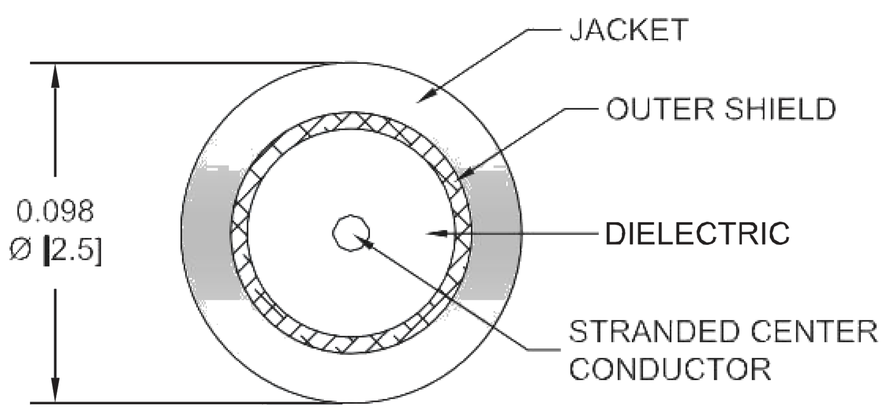


## Applications

- General Purpose
- Laboratory Use

### Description

Ebeestock's ET27228 type N male right angle to type N male right angle 12 inch cable using ET-RG316 coax is part of our full line of RF components available for same-day shipping. Ebeestock's flexible RF cable assemblies are ideal for applications where tight bends and flexure are required. This Ebeestock type N to type N cable assembly has a male to male gender configuration with 50 ohm flexible ET-RG316 coax. The ET27228 type N male to type N male cable assembly operates to 3 GHz. The right angle type N interfaces on the ET-RG316 cable allow for easier connections in tight spaces.

Custom versions of most RF cable assemblies can be built and shipped same day. Custom cable assembly lengths can be obtained by specifying the desired length on the web site at time of order or by contacting a sales representative. Other available RF cable assembly value added services include connector orientation or clocking, heat shrink booting and custom labeling. RF testing can also be performed to document the electrical performance of your cable assembly.

Click the following link (or enter part number in "SEARCH" on website) to obtain additional part information including price, inventory and certifications: N Male Right Angle to N Male Right Angle Cable 12 Inch Length Using ET-RG316 Coax ET27228

8th Floor, Building 1, Yongfu Science and Technology Center Industrial Park,
Nanzha District 5, Humen,523900, Dongguan, Guangdong, China.

Webstie:www.ebeestock.com Email:sales@ebeestock.com

© 2022 Ebeestock Enterprises All Rights Reserved

N Male Right Angle to N Male Right Angle Cable 12 Inch Lengt
h Using ET-RG316 Coax

# RF Cable Assemblies Technical Data Sheet ET27228

## Electrical Specifications

| Description | Minimum | Typical | Maximum | Units |
|---|---|---|---|---|
| Frequency Range | DC | | 3 | GHz |
| Capacitance | | 32 [104.99] | | pF/ft [pF/m] |

## Specifications by Frequency

| Description | F1 | F2 | F3 | F4 | F5 | Units |
|---|---|---|---|---|---|---|
| Frequency | 0.1 | 0.25 | 0.5 | 1 | 3 | GHz |
| Insertion Loss (Typ.) | 0.31 | 0.36 | 0.438 | 0.58 | 0.78 | dB |

## Mechanical Specifications

### Cable Assembly

| | |
|---|---|
| Weight | 0.258 lbs [117.03 g] |

### Cable

| | |
|---|---|
| Cable Type | ET-RG316 |
| Impedance | 50 Ohms |
| Inner Conductor Type | Stranded |
| Inner Conductor Material and Plating | Copper Clad Steel, Silver |
| Dielectric Type | PTFE |
| Number of Shields | 1 |
| Shield Layer 1 | Silver Plated Copper Braid |
| Jacket Material | FEP, Tan |
| Jacket Diameter | 0.098 in [2.49 mm] |

Click the following link (or enter part number in “SEARCH” on website) to obtain additional part information including price, inventory and certifications: N Male Right Angle to N Male Right Angle Cable 12 Inch Length Using ET-RG316 Coax ET27228

8th Floor, Building 1, Yongfu Science and Technology Center Industrial Park,
Nanzha District 5, Humen,523900, Dongguan, Guangdong, China.

Webstie:www.ebeestock.com Email:sales@ebeestock.com

© 2022 Ebeestock Enterprises All Rights Reserved

N Male Right Angle to N Male Right Angle Cable 12 Inch Lengt
h Using ET-RG316 Coax

# RF Cable Assemblies Technical Data Sheet ET27228

## Connectors

| Description | Connector 1 | Connector 2 |
|---|---|---|
| Type | N Male Right Angle | N Male Right Angle |
| Specification | MIL-STD-348A | MIL-STD-348A |
| Impedance | 50 Ohms | 50 Ohms |
| Contact Material and Plating | Brass, Gold | Brass, Gold |
| Contact Plating Specification | 30µ in. minimum | 30µ in. minimum |
| Dielectric Type | Teflon | Teflon |
| Body Material and Plating | Brass, Nickel | Brass, Nickel |
| Body Plating Specification | 100µ in. minimum | 100µ in. minimum |

## Compliance Certifications (see product page for current document)

## Plotted and Other Data

Notes:

- Values at 25°C, sea level.

Click the following link (or enter part number in “SEARCH” on website) to obtain additional part information including price, inventory and certifications: N Male Right Angle to N Male Right Angle Cable 12 Inch Length Using ET-RG316 Coax ET27228

8th Floor, Building 1, Yongfu Science and Technology Center Industrial Park,
Nanzha District 5, Humen,523900, Dongguan, Guangdong, China.

Webstie:www.ebeestock.com Email:sales@ebeestock.com

© 2022 Ebeestock Enterprises All Rights Reserved

N Male Right Angle to N Male Right Angle Cable 12 Inch Lengt
h Using ET-RG316 Coax

# RF Cable Assemblies Technical Data Sheet ET27228

## How to Order

Part Number Configuration: **ET34236 - xx uu**

- ET34236 — Base Number
- xx — Length
- uu — Unit of Measure:
  - cm = Centimeters
  - <blank> = Inches

Example: ET27228 = 12 inches long cable
ET34236-100cm = 100 cm long cable

N Male Right Angle to N Male Right Angle Cable 12 Inch Length Using ET-RG316 Coax from Ebeestock Enterprises has same day shipment for domestic and International orders. Our RF, microwave and millimeter wave products maintain a 99.4% availability and are part of the broadest selection in the industry.

Click the following link (or enter part number in “SEARCH” on website) to obtain additional part information including price, inventory and certifications: N Male Right Angle to N Male Right Angle Cable 12 Inch Length Using ET-RG316 Coax ET34236- 12

**URL:** https://www.ebeestock.com/n-male-right-angle-to-n-male-right-angle-cable-12-inch-length-using-rg316-coax-0027228

The information contained in this document is accurate to the best of our knowledge and representative of the part described herein. It may be necessary to make modifications to the part and/or the documentation of the part, in order to implement improvements. Ebeestock reserves the right to make such changes as required. Unless otherwise stated, all specifications are nominal. Ebeestock does not make any representation or warranty regarding the suitability of the part described herein for any particular purpose, and Ebeestock does not assume any liability arising out of the use of any part or documentation.

8th Floor, Building 1, Yongfu Science and Technology Center Industrial Park,
Nanzha District 5, Humen,523900, Dongguan, Guangdong, China.

Webstie:www.ebeestock.com Email:sales@ebeestock.com

© 2022 Ebeestock Enterprises All Rights Reserved

© 2022 Ebeestock Enterprises All Rights Reserved

www.ebeestock.com

| REVISIONS | | | |
|---|---|---|---|
| REV. | DESCRIPTION | DATE | APPROVED |
| B | PCR ET34236 20220308 | 03/21/2022 | AGANWANI |

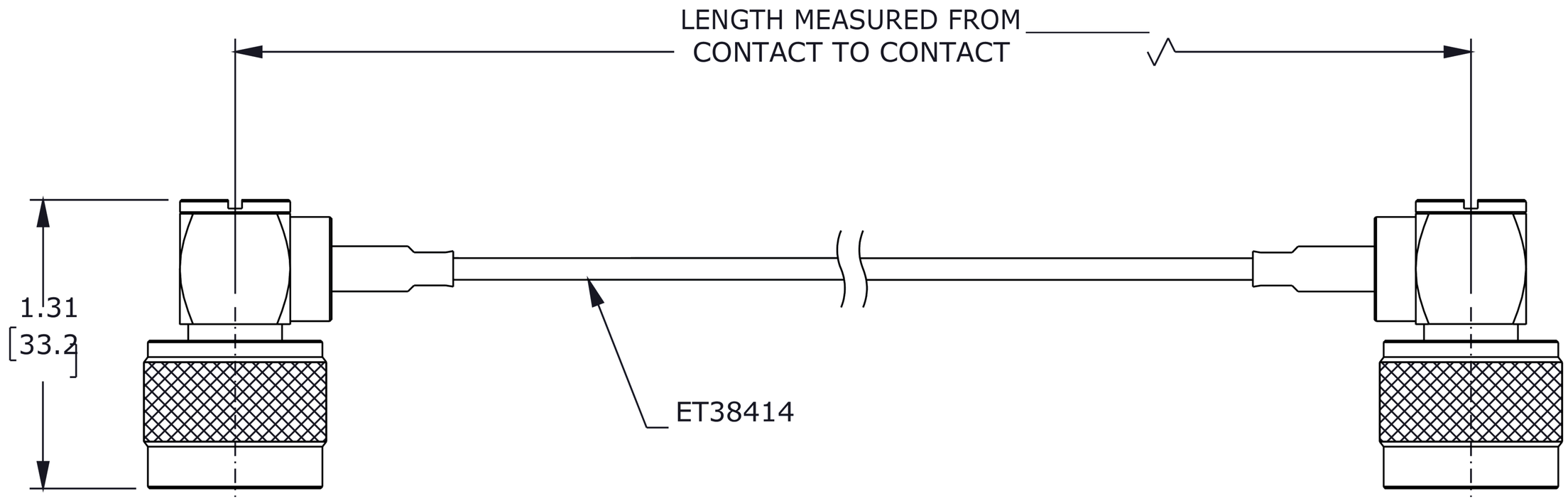


N MALE
RIGHT ANGLE

N MALE
RIGHT ANGLE

THESE COMMODITIES, TECHNOLOGY OR SOFTWARE WERE EXPORTED FROM THE UNITED STATES IN ACCORDANCE WITH THE EXPORT ADMINISTRATION REGULATIONS. DIVERSION CONTRARY TO U.S. LAW PROHIBITED.

UNLESS OTHERWISE SPECIFIED
LEADING DIMENSIONS ARE INCHES
DIMENSIONS IN [ ] ARE MILLIMETERS

TOLERANCES:

.X = ± .2 [5.08]
.XX = ± .02 [.51]
.XXX = ± .005 [.13]

FRACTIONS ± 1/32
ANGLES ± 1°

CABLE LENGTH (L) TOLERANCES:

L ≤ 12 [305] = +1 [25] / -0
12 [305] < L ≤ 60 [1524] = +2 [51] / -0
60 [1524] < L ≤ 120 [3048] = +4 [102] / -0
120 [3048] < L ≤ 300 [7620] = +6 [152] / -0
300 [7620] < L = +5%L / -0

ALL DIMENSIONS SHOWN ARE FOR REFERENCE ONLY.

PASTERNACK an INFINITE brand
8th Floor, Building 1, Yongfu Science and Technology Center Industrial Park
P.O.Box 16759, Irvine, CA 92623.
Phone: 1.949.261.1920 | 1.866.727.8376
Fax: 1.949.261.7451
Website: E-mail:
sales@Ebeestock.com

THIRD-ANGLE PROJECTION

THE INFORMATION AND DESIGN IN THIS DOCUMENT IS THE PROPERTY OF Ebeestock CORPORATION ALL RIGHTS RESERVED.

SHEET 1 OF 1

SCALE N/A

| SIZE | CAGE CODE | DRAWN BY | ITEM NO. | REV |
|---|---|---|---|---|
| A | 53919 | DZINN | ET34236 | B |



T-Rev.D