N Male Right Angle to N Male Right Angle Cable 48 Inch Lengt
h Using ET-RG316 Coax

RF Cable Assemblies Technical Data Sheet ET27231

Configuration

- Connector 1: N Male Right Angle
- Connector 2: N Male Right Angle
- Cable Type: ET-RG316

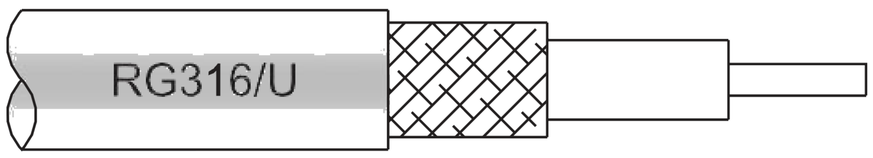

Features

- Max Frequency 3 GHz
- FEP Jacket

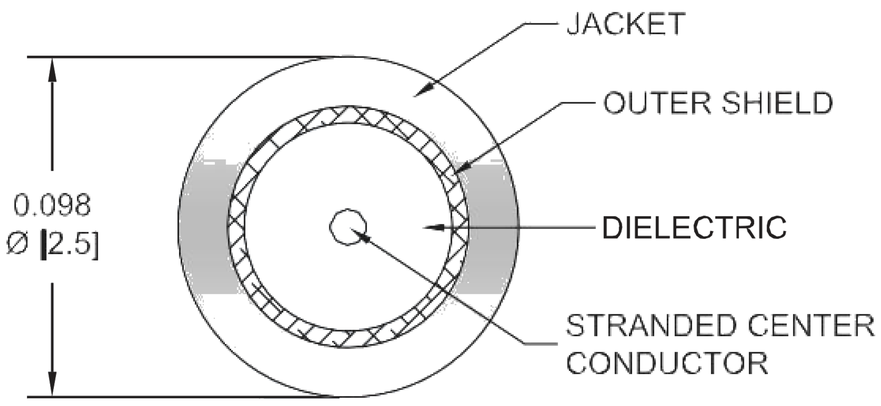

Applications

- General Purpose
- Laboratory Use

Description

Ebeestock's ET27231 type N male right angle to type N male right angle 48 inch cable using ET-RG316 coax is part of our full line of RF components available for same-day shipping. Ebeestock's flexible RF cable assemblies are ideal for applications where tight bends and flexure are required. This Ebeestock type N to type N cable assembly has a male to male gender configuration with 50 ohm flexible ET-RG316 coax. The ET27231 type N male to type N male cable assembly operates to 3 GHz. The right angle type N interfaces on the ET-RG316 cable allow for easier connections in tight spaces.

Custom versions of most RF cable assemblies can be built and shipped same day. Custom cable assembly lengths can be obtained by specifying the desired length on the web site at time of order or by contacting a sales representative. Other available RF cable assembly value added services include connector orientation or clocking, heat shrink booting and custom labeling. RF testing can also be performed to document the electrical performance of your cable assembly.

Click the following link (or enter part number in "SEARCH" on website) to obtain additional part information including price, inventory and certifications: N Male Right Angle to N Male Right Angle Cable 48 Inch Length Using ET-RG316 Coax ET27231

8th Floor, Building 1, Yongfu Science and Technology Center Industrial Park,
Nanzha District 5, Humen,523900, Dongguan, Guangdong, China.

Webstie:www.ebeestock.com Email:sales@ebeestock.com

© 2022 Ebeestock Enterprises All Rights Reserved

N Male Right Angle to N Male Right Angle Cable 48 Inch Lengt
h Using ET-RG316 Coax

RF Cable Assemblies Technical Data Sheet ET27231

Electrical Specifications

Description	Minimum	Typical	Maximum	Units
Frequency Range	DC		3	GHz
Capacitance		32 [104.99]		pF/ft [pF/m]

Specifications by Frequency

Description	F1	F2	F3	F4	F5	Units
Frequency	0.1	0.25	0.5	1	3	GHz
Insertion Loss (Typ.)	0.64	0.84	1.153	1.72	2.52	dB

Mechanical Specifications

Cable Assembly

Weight	0.291 lbs [132 g]

Cable

Cable Type	ET-RG316
Impedance	50 Ohms
Inner Conductor Type	Stranded
Inner Conductor Material and Plating	Copper Clad Steel, Silver
Dielectric Type	PTFE
Number of Shields	1
Shield Layer 1	Silver Plated Copper Braid
Jacket Material	FEP, Tan
Jacket Diameter	0.098 in [2.49 mm]

Click the following link (or enter part number in “SEARCH” on website) to obtain additional part information including price, inventory and certifications: N Male Right Angle to N Male Right Angle Cable 48 Inch Length Using ET-RG316 Coax ET27231

8th Floor, Building 1, Yongfu Science and Technology Center Industrial Park,
Nanzha District 5, Humen,523900, Dongguan, Guangdong, China.

Webstie:www.ebeestock.com Email:sales@ebeestock.com

© 2022 Ebeestock Enterprises All Rights Reserved

N Male Right Angle to N Male Right Angle Cable 48 Inch Lengt
h Using ET-RG316 Coax

RF Cable Assemblies Technical Data Sheet ET27231

Connectors

Description	Connector 1	Connector 2
Type	N Male Right Angle	N Male Right Angle
Specification	MIL-STD-348A	MIL-STD-348A
Impedance	50 Ohms	50 Ohms
Contact Material and Plating	Brass, Gold	Brass, Gold
Contact Plating Specification	30µ in. minimum	30µ in. minimum
Dielectric Type	Teflon	Teflon
Body Material and Plating	Brass, Nickel	Brass, Nickel
Body Plating Specification	100µ in. minimum	100µ in. minimum

Compliance Certifications (see product page for current document)

Plotted and Other Data

Notes:

- Values at 25°C, sea level.

Click the following link (or enter part number in “SEARCH” on website) to obtain additional part information including price, inventory and certifications: N Male Right Angle to N Male Right Angle Cable 48 Inch Length Using ET-RG316 Coax ET27231

8th Floor, Building 1, Yongfu Science and Technology Center Industrial Park,
Nanzha District 5, Humen,523900, Dongguan, Guangdong, China.

Webstie:www.ebeestock.com Email:sales@ebeestock.com

© 2022 Ebeestock Enterprises All Rights Reserved

N Male Right Angle to N Male Right Angle Cable 48 Inch Lengt
h Using ET-RG316 Coax

RF Cable Assemblies Technical Data Sheet ET27231

How to Order

Part Number Configuration: **ET34236 - xx uu**

- ET34236 — Base Number
- xx — Length
- uu — Unit of Measure:
  - cm = Centimeters
  - <blank> = Inches

Example: ET34236-12 = 12 inches long cable
ET34236-100cm = 100 cm long cable

N Male Right Angle to N Male Right Angle Cable 48 Inch Length Using ET-RG316 Coax from Ebeestock Enterprises has same day shipment for domestic and International orders. Our RF, microwave and millimeter wave products maintain a 99.4% availability and are part of the broadest selection in the industry.

Click the following link (or enter part number in “SEARCH” on website) to obtain additional part information including price, inventory and certifications: N Male Right Angle to N Male Right Angle Cable 48 Inch Length Using ET-RG316 Coax ET34236- 48

URL: https://www.ebeestock.com/n-male-right-angle-to-n-male-right-angle-cable-12-inch-length-using-rg316-coax-0027228

The information contained in this document is accurate to the best of our knowledge and representative of the part described herein. It may be necessary to make modifications to the part and/or the documentation of the part, in order to implement improvements. Ebeestock reserves the right to make such changes as required. Unless otherwise stated, all specifications are nominal. Ebeestock does not make any representation or warranty regarding the suitability of the part described herein for any particular purpose, and Ebeestock does not assume any liability arising out of the use of any part or documentation.

8th Floor, Building 1, Yongfu Science and Technology Center Industrial Park,
Nanzha District 5, Humen,523900, Dongguan, Guangdong, China.

Webstie:www.ebeestock.com Email:sales@ebeestock.com

© 2022 Ebeestock Enterprises All Rights Reserved

© 2022 Ebeestock Enterprises All Rights Reserved

www.ebeestock.com

REVISIONS			
REV.	DESCRIPTION	DATE	APPROVED
B	PCR ET34236 20220308	03/21/2022	AGANWANI

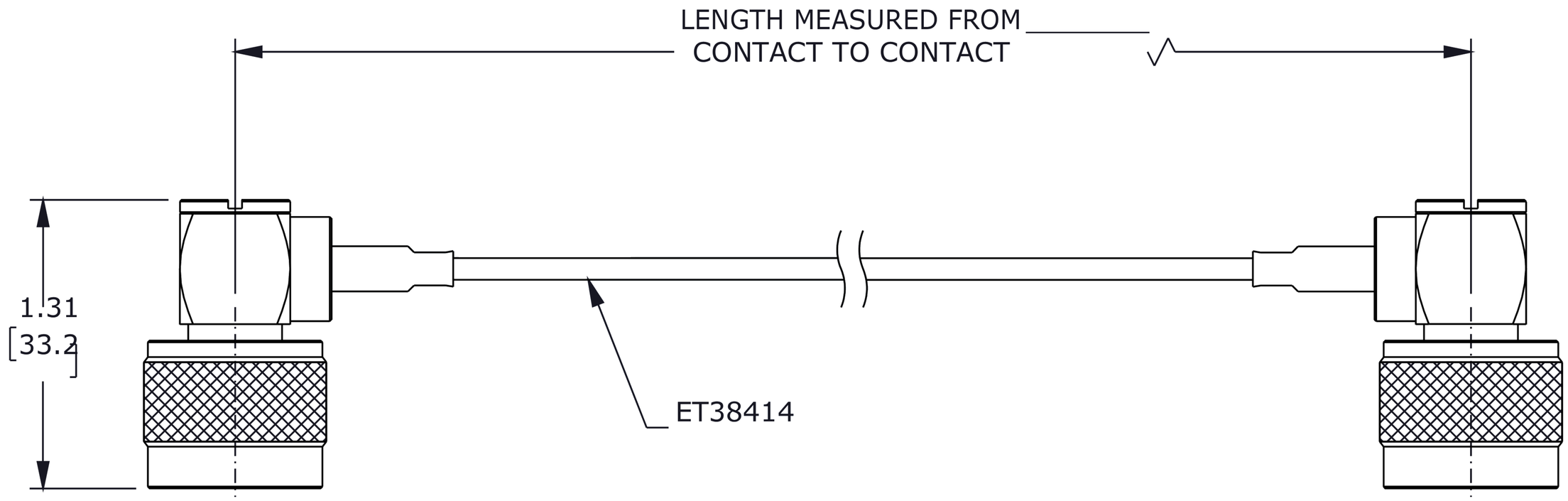

N MALE
RIGHT ANGLE

N MALE
RIGHT ANGLE

THESE COMMODITIES, TECHNOLOGY OR SOFTWARE WERE EXPORTED FROM THE UNITED STATES IN ACCORDANCE WITH THE EXPORT ADMINISTRATION REGULATIONS. DIVERSION CONTRARY TO U.S. LAW PROHIBITED.

UNLESS OTHERWISE SPECIFIED
LEADING DIMENSIONS ARE INCHES
DIMENSIONS IN [ ] ARE MILLIMETERS

TOLERANCES:

.X = ± .2 [5.08]
.XX = ± .02 [.51]
.XXX = ± .005 [.13]

FRACTIONS ± 1/32
ANGLES ± 1°

CABLE LENGTH (L) TOLERANCES:

L ≤ 12 [305] = +1 [25] / -0
12 [305] < L ≤ 60 [1524] = +2 [51] / -0
60 [1524] < L ≤ 120 [3048] = +4 [102] / -0
120 [3048] < L ≤ 300 [7620] = +6 [152] / -0
300 [7620] < L = +5%L / -0

ALL DIMENSIONS SHOWN ARE FOR REFERENCE ONLY.

PASTERNACK an INFINITE brand
8th Floor, Building 1, Yongfu Science and Technology Center Industrial Park
P.O.Box 16759, Irvine, CA 92623.
Phone: 1.949.261.1920 | 1.866.727.8376
Fax: 1.949.261.7451
Website: E-mail:
sales@Ebeestock.com

THIRD-ANGLE PROJECTION

THE INFORMATION AND DESIGN IN THIS DOCUMENT IS THE PROPERTY OF Ebeestock CORPORATION ALL RIGHTS RESERVED.

SHEET 1 OF 1

SCALE N/A

SIZE	CAGE CODE	DRAWN BY	ITEM NO.	REV
A	53919	DZINN	ET34236	B

T-Rev.D