N Male to TNC Male Cable Using ET38378 Coax In 200 CM Length

RF Cable Assemblies Technical Data Sheet ET28524

Configuration

- Connector 1: N Male
- Connector 2: TNC Male
- Cable Type: ET38378

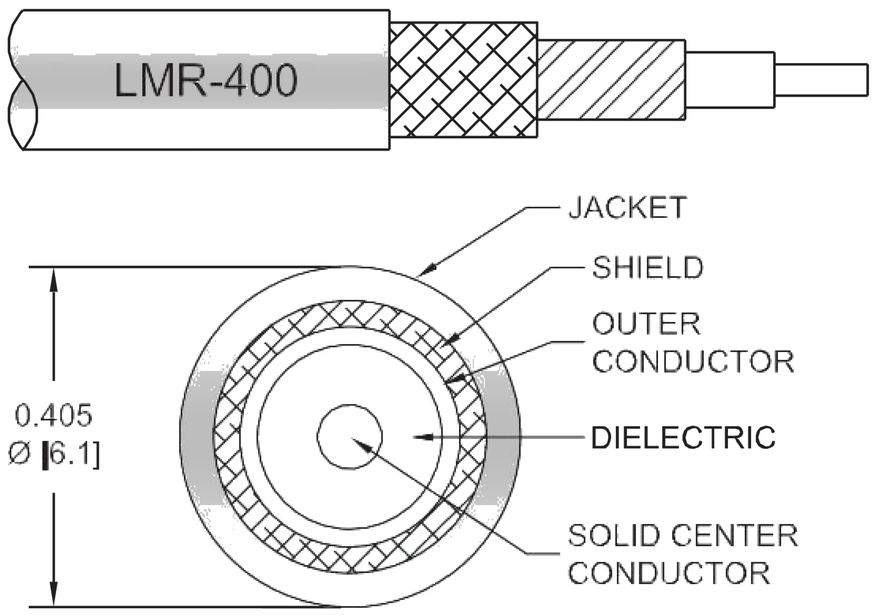

Features

- Max Frequency 5.8 GHz
- Shielding Effectivity > 90 dB
- 85% Phase Velocity
- Double Shielded
- PE Jacket

Applications

- General Purpose
- Laboratory Use

Description

Ebeestock's ET28524 type N male to TNC male 200 cm cable using ET38378 coax is part of our full line of RF components available for same-day shipping. Ebeestock's flexible RF cable assemblies are ideal for applications where tight bends and flexure are required. This Ebeestock type N to TNC cable assembly has a male to male gender configuration with 50 ohm flexible ET38378 coax. The ET28524 type N male to TNC male cable assembly operates to 5.8 GHz. The double shielding of this Ebeestock cable assembly provides excellent shielding effectiveness of better than 90dB.

Custom versions of most RF cable assemblies can be built and shipped same day. Custom cable assembly lengths can be obtained by specifying the desired length on the web site at time of order or by contacting a sales representative. Other available RF cable assembly value added services include connector orientation or clocking, heat shrink booting and custom labeling. RF testing can also be performed to document the electrical performance of your cable assembly.

Click the following link (or enter part number in "SEARCH" on website) to obtain additional part information including price, inventory and certifications: N Male to TNC Male Cable Using ET38378 Coax In 200 CM Length ET28524

8th Floor, Building 1, Yongfu Science and Technology Center Industrial Park,
Nanzha District 5, Humen,523900, Dongguan, Guangdong, China.

Webstie:www.ebeestock.com Email:sales@ebeestock.com

© 2022 Ebeestock Enterprises All Rights Reserved

N Male to TNC Male Cable Using ET38378 Coax In 200 CM Length

RF Cable Assemblies Technical Data Sheet ET28524

Electrical Specifications

Description	Minimum	Typical	Maximum	Units
Frequency Range	DC		5.8	GHz
VSWR			1.4:1	
Velocity of Propagation		85		%
RF Shielding	90			dB
Group Delay		1.2 [3.94]		ns/ft [ns/m]
Capacitance		23.9 [78.41]		pF/ft [pF/m]
Inductance		0.06 [0.2]		uH/ft [uH/m]
DC Resistance Inner Conductor		1.39 [4.56]		Ω/1000ft [Ω/Km]
DC Resistance Outer Conductor		1.65 [5.41]		Ω/1000ft [Ω/Km]
Jacket Spark			8,000	Vrms

Specifications by Frequency

Description	F1	F2	F3	F4	F5	Units
Frequency	0.25	0.5	1	2.5	5.8	GHz
Insertion Loss (Typ.)	0.24	0.33	0.47	0.77	1.2	dB

Electrical Specification Notes:
The Insertion Loss data above is based on the performance specifications of the coax and connectors used in this assembly. The Insertion Loss includes an estimated insertion loss of 0.1*SQRT(FGHz) dB per connector.

Mechanical Specifications

Cable Assembly

Length*	78.74 in [200 cm]
Weight	0.646 lbs [293.02 g]

Cable

Cable Type	ET38378
Impedance	50 Ohms
Inner Conductor Type	Solid
Inner Conductor Material and Plating	Copper Clad Aluminum
Dielectric Type	PE (F)
Number of Shields	2
Shield Layer 1	Aluminum Tape
Shield Layer 2	Tinned Copper Braid
Jacket Material	PE, Black
Jacket Diameter	0.405 in [10.29 mm]

Click the following link (or enter part number in “SEARCH” on website) to obtain additional part information including price, inventory and certifications: N Male to TNC Male Cable Using ET38378 Coax In 200 CM Length ET28524

8th Floor, Building 1, Yongfu Science and Technology Center Industrial Park,
Nanzha District 5, Humen,523900, Dongguan, Guangdong, China.

Webstie:www.ebeestock.com Email:sales@ebeestock.com

© 2022 Ebeestock Enterprises All Rights Reserved

N Male to TNC Male Cable Using ET38378 Coax In 200 CM Length

RF Cable Assemblies Technical Data Sheet ET28524

One Time Minimum Bend Radius	1 in [25.4 mm]
Repeated Minimum Bend Radius	4 in [101.6 mm]
Bending Moment	0.5 lbs-ft [0.68 N-m]
Flat Plate Crush	40 lbs/in [0.71 Kg/mm]
Tensile Strength	160 lbs [72.57 Kg]

Connectors

Description	Connector 1	Connector 2
Type	N Male	TNC Male
Impedance	50 Ohms	50 Ohms
Mating Cycles		500
Contact Material and Plating	Brass, Gold	Brass, Gold
Contact Plating Specification	50µ in. minimum	
Dielectric Type	PTFE	PTFE
Body Material and Plating	Brass, Tri-Metal	Brass, Tri-Metal
Body Plating Specification	100µ in. minimum	
Coupling Nut Material and Plating	Brass, Tri-Metal	Brass, Tri-Metal
Coupling Nut Plating Specification	100µ in. minimum	
Torque	18.417 ft-lbs [24.97 Nm]	

Compliance Certifications (see product page for current document)

Plotted and Other Data

Notes:

- Values at 25°C, sea level.

Click the following link (or enter part number in “SEARCH” on website) to obtain additional part information including price, inventory and certifications: N Male to TNC Male Cable Using ET38378 Coax In 200 CM Length ET28524

8th Floor, Building 1, Yongfu Science and Technology Center Industrial Park,
Nanzha District 5, Humen,523900, Dongguan, Guangdong, China.

Webstie:www.ebeestock.com Email:sales@ebeestock.com

© 2022 Ebeestock Enterprises All Rights Reserved

N Male to TNC Male Cable Using ET38378 Coax In 200 CM Length

RF Cable Assemblies Technical Data Sheet ET28524

How to Order

Part Number Configuration: **ET3C1889 - xx uu**

- ET3C1889 — Base Number
- xx — Length
- uu — Unit of Measure:
  - cm = Centimeters
  - <blank> = Inches

Example: ET3C1889-12 = 12 inches long cable
ET3C1889-100cm = 100 cm long cable

N Male to TNC Male Cable Using ET38378 Coax In 200 CM Length from Ebeestock Enterprises has same day shipment for domestic and International orders. Our RF, microwave and millimeter wave products maintain a 99.4% availability and are part of the broadest selection in the industry.

Click the following link (or enter part number in “SEARCH” on website) to obtain additional part information including price, inventory and certifications: N Male to TNC Male Cable Using ET38378 Coax In 200 CM Length ET28524

URL: https://www.ebeestock.com/n-male-to-tnc-male-cable-using-lmr-400-coax-in-12-inch-length-0028516

The information contained in this document is accurate to the best of our knowledge and representative of the part described herein. It may be necessary to make modifications to the part and/or the documentation of the part, in order to implement improvements. Ebeestock reserves the right to make such changes as required. Unless otherwise stated, all specifications are nominal. Ebeestock does not make any representation or warranty regarding the suitability of the part described herein for any particular purpose, and Ebeestock does not assume any liability arising out of the use of any part or documentation.

8th Floor, Building 1, Yongfu Science and Technology Center Industrial Park,
Nanzha District 5, Humen,523900, Dongguan, Guangdong, China.

Webstie:www.ebeestock.com Email:sales@ebeestock.com

© 2022 Ebeestock Enterprises All Rights Reserved

© 2022 Ebeestock Enterprises All Rights Reserved

www.ebeestock.com

REVISIONS			
REV.	DESCRIPTION	DATE	APPROVED
A	INITIAL RELEASE	11/4/2021	A. GANWANI

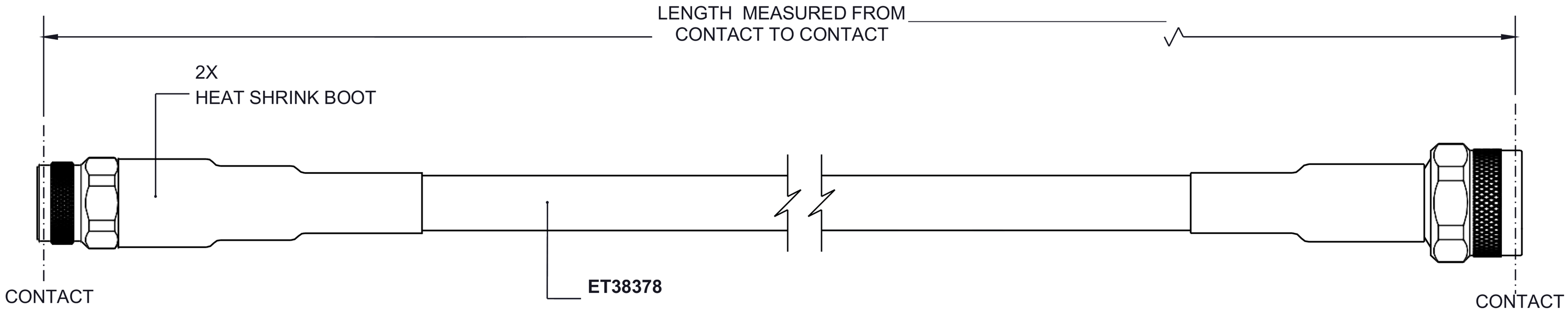

TNC MALE

N MALE

UNLESS OTHERWISE SPECIFIED
LEADING DIMENSIONS ARE INCHES
DIMENSIONS IN [ ] ARE MILLIMETERS

TOLERANCES:

.X = ±.2 [5.08] FRACTIONS
.XX = ± .02 [.51] ± 1/32
.XXX = ±.005 [.13] ANGLES ± 1°

CABLE LENGTH (L) TOLERANCES:

L ≤ 12 [305] = +1 [25] / -0
12 [305] < L ≤ 60 [1524] = +2 [51] / -0
60 [1524] < L ≤ 120 [3048] = +4 [102] / -0
120 [3048] < L ≤ 300 [7620] = +6 [152] / -0
300 [7620] < L = +5%L / -0

ALL DIMENSIONS SHOWN
ARE FOR REFERENCE ONLY.

ebeestock
Ebeestock.com
8th Floor, Building 1, Yongfu Science
and Technology Center Industrial Park,
Nanzha District 5, Humen,523900, Dongguan, Guangdong, China.
Webstie: www.ebeestock.com **Email:** sales@ebeestock.com

THIRD-ANGLE PROJECTION

THE INFORMATION AND
DESIGN IN THIS DOCUMENT
IS THE PROPERTY OF
Ebeestock CORPORATION ALL
RIGHTS RESERVED.

SHEET 1 OF 1

SCALE N/A

SIZE	CAGE CODE	DRAWN BY	ITEM NO.	REV
A	53919	K.DANG	ET3C1889	A

THESE COMMODITIES, TECHNOLOGY OR SOFTWARE WERE EXPORTED FROM THE UNITED STATES IN ACCORDANCE WITH THE EXPORT ADMINISTRATION REGULATIONS. DIVERSION CONTRARY TO U.S. LAW PROHIBITED.

T-Rev.D