Plenum N Male Right Angle to N Male Right Angle Low PIM Cabl
e 36 Inch Length Using ET38365 Coax , LF Solder

# RF Cable Assemblies Technical Data Sheet ET28651

## Configuration

- Connector 1: N Male Right Angle
- Connector 2: N Male Right Angle
- Cable Type: ET38365

## Features

- Max Frequency 6 GHz
- Low PIM: -160 dBc Max
- Shielding Effectivity > 100 dB
- 76% Phase Velocity
- FEP Jacket
- PIM < -160 dBc
- 100% Tested with PIM Test Results Marked on Cable
- UL910 Plenum Rated Cable
- Lightweight and Extremely Flexible
- Low Loss with Excellent VSWR
- IP67 (when mated)

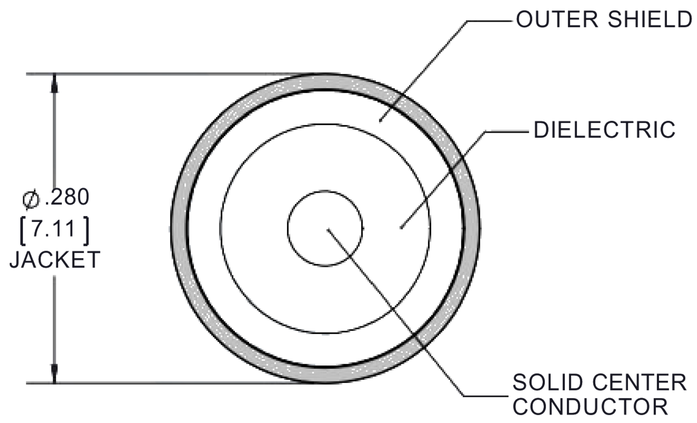


## Applications

- General Purpose
- Laboratory Use
- Low PIM Applications
- Distributed Antenna Systems (DAS)
- Plenum Installations
- Multi-Carrier Communication Systems
- PIM Testing

### Description

Ebeestock's low PIM plenum cable assemblies using ET38365 coax and right angle N male to right angle N male connections are part of our full line of RF components available for same-day shipping. These right angle N male to right angle N male plenum coax cable assemblies deliver low PIM performance to support Distributed Antenna Systems (DAS) and other complex, multi-carrier communication systems. The ET38365 coax cable has been certified in accordance with UL910 for plenum coaxial cable installations. Each right angle N male to right angle N male cable assembly is 100% tested for Passive Intermodulation (PIM) and the tested value is marked directly on the cable.

Our right angle N male to right angle N male cable datasheet specifications and drawing with dimensions are shown below in this PDF. Whether the need is to provide a low PIM jumper connection, low PIM test cable or simply create a custom cable assembly configuration, Ebeestock has the right cable assemblies for the job.

Click the following link (or enter part number in "SEARCH" on website) to obtain additional part information including price, inventory and certifications: Plenum N Male Right Angle to N Male RightAngle Low PIM Cable 36 Inch Length Using SPP-250-LLPL Coax , LF Solder ET28651

8th Floor, Building 1, Yongfu Science and Technology Center Industrial Park,
Nanzha District 5, Humen,523900, Dongguan, Guangdong, China.

Webstie:www.ebeestock.com Email:sales@ebeestock.com

© 2022 Ebeestock Enterprises All Rights Reserved

Plenum N Male Right Angle to N Male Right Angle Low PIM Cabl
e 36 Inch Length Using ET38365 Coax , LF Solder

# RF Cable Assemblies Technical Data Sheet ET28651

## Electrical Specifications

| Description | Minimum | Typical | Maximum | Units |
|---|---|---|---|---|
| Frequency Range | DC | | 6 | GHz |
| VSWR | | | 1.35:1 | |
| Velocity of Propagation | | 76 | | % |
| RF Shielding | 100 | | | dB |
| Passive Intermodulation | | -165 | -160 | dBc |
| Capacitance | | 27 [88.58] | | pF/ft [pF/m] |
| Inductance | | 0.067 [0.22] | | uH/ft [uH/m] |
| Operating Voltage (AC) | | | 750 | Vrms |

### Specifications by Frequency

| Description | F1 | F2 | F3 | F4 | F5 | Units |
|---|---|---|---|---|---|---|
| Frequency | 5 | 1 | 2 | 4 | 6 | GHz |
| Insertion Loss (Max.) | 0.52 | 0.57 | 0.65 | 0.76 | 0.85 | dB |
| VSWR (Max.) | 1.25:1 | 1.25:1 | 1.25:1 | 1.35:1 | 1.35:1 | |

Electrical Specification Notes:
PIM test results vary between cables
The Insertion Loss data above is based on the performance specifications of the coax used in this assembly. The Insertion Loss includes an estimated insertion loss of 0.4dB of connector loss.

## Mechanical Specifications

### Cable Assembly

| | |
|---|---|
| Length* | 36 in [914.4 mm] |
| Diameter | 0.28 in [7.11 mm] |

### Cable

| | |
|---|---|
| Cable Type | ET38365 |
| Impedance | 50 Ohms |
| Inner Conductor Type | Solid |
| Inner Conductor Material and Plating | Copper, Bare |
| Dielectric Type | PTFE |
| Number of Shields | 1 |
| Shield Layer 1 | Helically Corrugated Copper Tube |
| Outer Conductor Diameter | 0.25 in [6.35 mm] |

Click the following link (or enter part number in “SEARCH” on website) to obtain additional part information including price, inventory and certifications: Plenum N Male Right Angle to N Male RightAngle Low PIM Cable 36 Inch Length Using SPP-250-LLPL Coax , LF Solder ET28651

8th Floor, Building 1, Yongfu Science and Technology Center Industrial Park,
Nanzha District 5, Humen,523900, Dongguan, Guangdong, China.

Webstie:www.ebeestock.com Email:sales@ebeestock.com

© 2022 Ebeestock Enterprises All Rights Reserved

Plenum N Male Right Angle to N Male Right Angle Low PIM Cabl
e 36 Inch Length Using ET38365 Coax , LF Solder

# RF Cable Assemblies Technical Data Sheet ET28651

| | |
|---|---|
| Jacket Material | FEP |
| Jacket Diameter | 0.28 in [7.11 mm] |
| One Time Minimum Bend Radius | 1.5 in [38.1 mm] |

**Connectors**

| Description | Connector 1 | Connector 2 |
|---|---|---|
| Type | N Male Right Angle | N Male Right Angle |
| Impedance | 50 Ohms | 50 Ohms |
| Contact Material and Plating | Brass, Silver | Brass, Silver |
| Dielectric Type | PTFE | PTFE |
| Body Material and Plating | Brass, Tri-Metal | Brass, Tri-Metal |
| Seal Gasket Material | Silicone Rubber | Silicone Rubber |

Mechanical Specification Notes:
*All cable assemblies have a length tolerance of 1.5% or ± 3/8”, whichever is greater.

## Environmental Specifications

**Temperature**

| | |
|---|---|
| Operating Range | -55 to +200 deg C |
| Storage Range | -55 to +200 deg C |
| Plenum Rating | UL910 |

## Compliance Certifications (see product page for current document)

## Plotted and Other Data

Notes:
- Values at 25°C, sea level.

Click the following link (or enter part number in “SEARCH” on website) to obtain additional part information including price, inventory and certifications: Plenum N Male Right Angle to N Male RightAngle Low PIM Cable 36 Inch Length Using SPP-250-LLPL Coax , LF Solder ET28651

8th Floor, Building 1, Yongfu Science and Technology Center Industrial Park,
Nanzha District 5, Humen,523900, Dongguan, Guangdong, China.

Webstie:www.ebeestock.com Email:sales@ebeestock.com

© 2022 Ebeestock Enterprises All Rights Reserved

Plenum N Male Right Angle to N Male Right Angle Low PIM Cabl
e 36 Inch Length Using ET38365 Coax , LF Solder

# RF Cable Assemblies Technical Data Sheet ET28651

**Typical Performance Data**

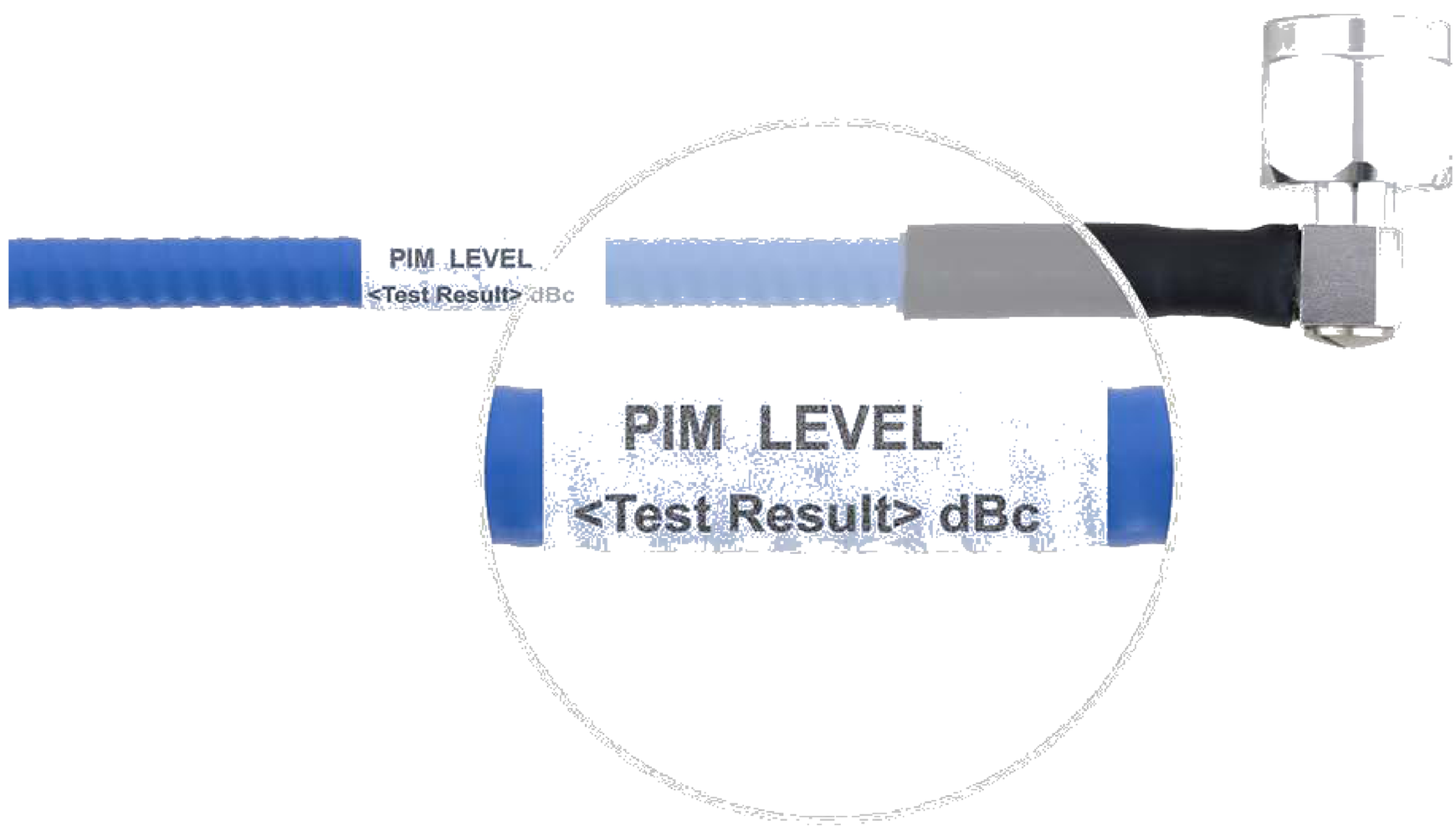


Click the following link (or enter part number in “SEARCH” on website) to obtain additional part information including price, inventory and certifications: Plenum N Male Right Angle to N Male RightAngle Low PIM Cable 36 Inch Length Using SPP-250-LLPL Coax , LF Solder ET28651

8th Floor, Building 1, Yongfu Science and Technology Center Industrial Park,
Nanzha District 5, Humen,523900, Dongguan, Guangdong, China.

Webstie:www.ebeestock.com Email:sales@ebeestock.com

© 2022 Ebeestock Enterprises All Rights Reserved

Plenum N Male Right Angle to N Male Right Angle Low PIM Cabl
e 36 Inch Length Using ET38365 Coax , LF Solder

# RF Cable Assemblies Technical Data Sheet ET28651

## How to Order

Part Number Configuration: **ET3C4145 - xx uu**

- **uu** — Unit of Measure:
  - cm = Centimeters
  - <blank> = Inches
- **xx** — Length
- **ET3C4145** — Base Number

Example: ET3C4145-12 = 12 inches long cable
ET3C4145-100cm = 100 cm long cable

Plenum N Male Right Angle to N Male Right Angle Low PIM Cable 36 Inch Length Using ET38365 Coax , LF Solder from Ebeestock Enterprises has same day shipment for domestic and International orders. Our RF, microwave and millimeter wave products maintain a 99.4% availability and are part of the broadest selection in the industry.

Click the following link (or enter part number in “SEARCH” on website) to obtain additional part information including price, inventory and certifications: Plenum N Male Right Angle to N Male RightAngle Low PIM Cable 36 Inch Length Using SPP-250-LLPL Coax , LF Solder ET28651

**URL:** https://www.ebeestock.com/plenum-n-male-right-angle-to-n-male-right-angle-low-pim-cable-12-inch-length-using-spp-250-llpl-coax-lf-solder-0028649

The information contained in this document is accurate to the best of our knowledge and representative of the part described herein. It may be necessary to make modifications to the part and/or the documentation of the part, in order to implement improvements. Ebeestock reserves the right to make such changes as required. Unless otherwise stated, all specifications are nominal. Ebeestock does not make any representation or warranty regarding the suitability of the part described herein for any particular purpose, and Ebeestock does not assume any liability arising out of the use of any part or documentation.

8th Floor, Building 1, Yongfu Science and Technology Center Industrial Park,
Nanzha District 5, Humen,523900, Dongguan, Guangdong, China.

Webstie:www.ebeestock.com Email:sales@ebeestock.com

© 2022 Ebeestock Enterprises All Rights Reserved

© 2022 Ebeestock Enterprises All Rights Reserved

www.ebeestock.com

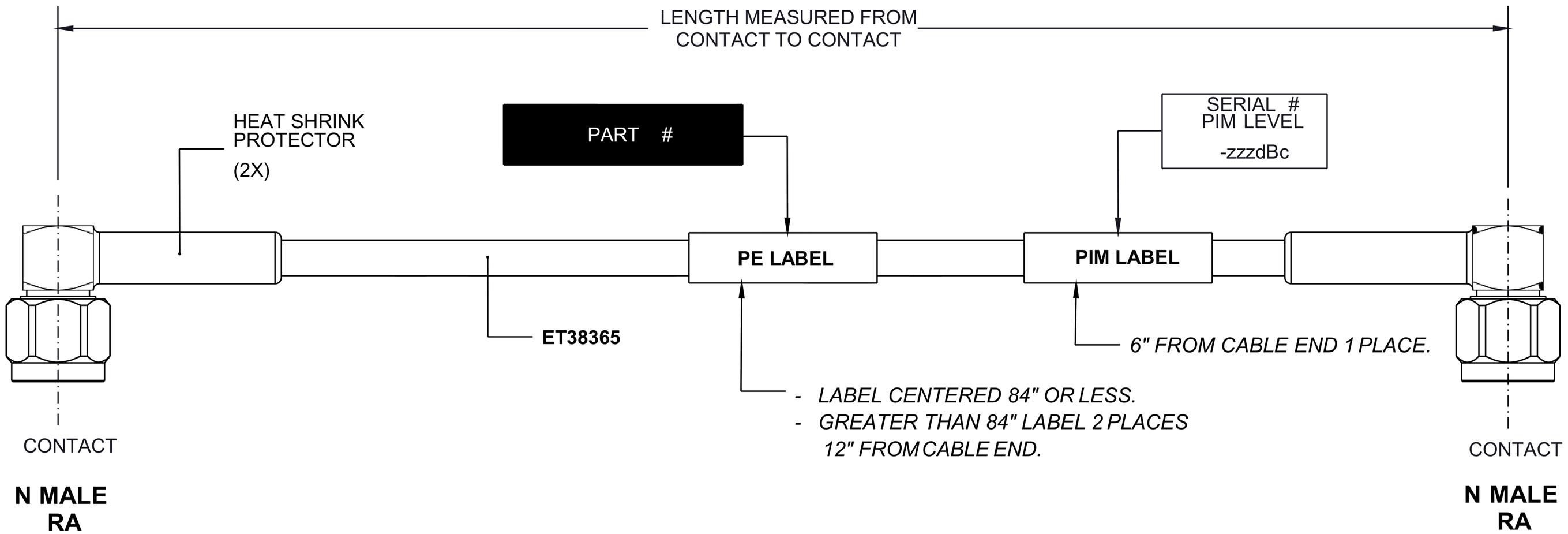


| STANDARD TOLERANCES | |
|---|---|
| .X | ±0.2 |
| .XX | ±0.01 |
| .XXX | ±0.005 |

*STANDARD TOLERANCES APPLY ONLY TO DIMENSIONS IN INCHES

ebeestock
Ebeestock.com
8th Floor, Building 1, Yongfu Science
and Technology Center Industrial Park,
Nanzha District 5, Humen,523900, Dongguan, Guangdong, China.
**Webstie:** www.ebeestock.com **Email:** sales@ebeestock.com

**DWG TITLE**

ET3C4145

**NOTES:**
1. UNLESS OTHERWISE SPECIFIED ALL DIMENSIONS ARE NOMINAL.
2. ALL SPECIFICATIONS ARE SUBJECT TO CHANGE WITHOUT NOTICE AT ANY TIME.
3. DIMENSIONS ARE IN INCHES [mm].

| CAGE CODE 53919 | CAD FILE 12/05/18 | SCALE N/A | SIZE A | 7361 |
|---|---|---|---|---|

© 2022 Ebeestock Enterprises All Rights Reserved