N Male to N Female Bulkhead Low Loss Cable 48 Inch Length Using ET38352 Coax

# RF Cable Assemblies Technical Data Sheet ET28775

## Configuration

- Connector 1: N Male
- Connector 2: N Female Bulkhead
- Cable Type: ET-P160LL

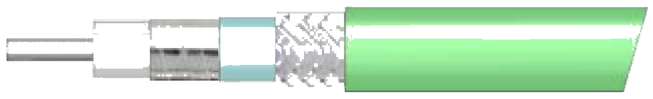

## Features

- Max Frequency 18 GHz
- Shielding Effectivity > 90 dB
- 82.5% Phase Velocity
- Triple Shielded
- FEP Jacket
- 0.8 inch Minimum Bend Radius
- Max VSWR of 1.35:1 to 18 GHz
- Same Day Shipment of Custom Lengths
- RoHS and REACH Compliant

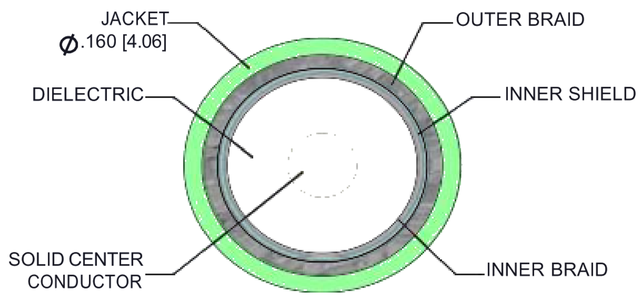

SECTION VIEW

## Applications

- General Purpose
- Laboratory Use
- Automated Test Systems
- Airborne Systems
- Phased Arrays
- EW and Countermeasures

### Description

The ET28775 N Male to N Female Bulkhead Low Loss cable assembly is part of a series of cable assemblies that use our ET-P160LL double shielded coax. The ET-P160LL based cable assemblies are available in a variety of connector configurations operating to a maximum frequency for this cable series of 18 GHz. The ET28775 high performance cable assembly with a 82.5% phase velocity offers very low loss performance in a 0.16 inch coax up to 18 GHz. The shielding effectiveness of the ET-P160LL double shielded coax is greater than 95 dB. The durable stainless steel connectors and FEP cable jacket provide a cost effective design ideal for test environments where a rugged cable assembly is required. A heavy duty heat shrink booting provides improved strain relief and adds to the durability of the cable assembly.

Custom versions of most RF cable assemblies can be built and shipped same day. Custom cable assembly lengths can be obtained by specifying the desired length on the web site at time of order or by contacting a sales representative. Other available RF cable assembly value added services include connector orientation or clocking, heat shrink booting and custom labeling. RF testing can also be performed to document the electrical performance of your cable assembly.

Click the following link (or enter part number in “SEARCH” on website) to obtain additional part information including price, inventory and certifications: N Male to N Female Bulkhead Low Loss Cable 48 Inch Length Using ET-P160LL Coax ET28775

8th Floor, Building 1, Yongfu Science and Technology Center Industrial Park,
Nanzha District 5, Humen,523900, Dongguan, Guangdong, China.

Webstie:www.ebeestock.com Email:sales@ebeestock.com

© 2022 Ebeestock Enterprises All Rights Reserved

N Male to N Female Bulkhead Low Loss Cable 48 Inch Length Using ET38352 Coax

# RF Cable Assemblies Technical Data Sheet ET28775

## Electrical Specifications

| Description | Minimum | Typical | Maximum | Units |
|---|---|---|---|---|
| Frequency Range | DC | | 18 | GHz |
| VSWR | | | 1.35:1 | |
| Velocity of Propagation | | 82.5 | | % |
| RF Shielding | 90 | | | dB |
| Capacitance | | 25 [82.02] | | pF/ft [pF/m] |

## Specifications by Frequency

| Description | F1 | F2 | F3 | F4 | F5 | Units |
|---|---|---|---|---|---|---|
| Frequency | 1 | 2 | 4.5 | 9 | 18 | GHz |
| Insertion Loss (Typ.) | 0.48 | 0.69 | 1.04 | 1.5 | 2.18 | dB |

Electrical Specification Notes:
The Insertion Loss data above is based on the performance specifications of the coax cable used in this assembly. The Insertion Loss includes an estimated insertion loss of 0.04*SQRT(F(GHz))dB maximum per connector.

## Mechanical Specifications

**Cable Assembly**

| | |
|---|---|
| Length* | 48 in [121.92 cm] |

**Cable**

| | |
|---|---|
| Cable Type | ET-P160LL |
| Impedance | 50 Ohms |
| Inner Conductor Type | Solid |
| Inner Conductor Material and Plating | Copper, Silver |
| Dielectric Type | Expanded PTFE Tape |
| Number of Shields | 3 |
| Shield Layer 1 | Silver Plated Copper |
| Shield Layer 2 | Aluminum Polyester |
| Shield Layer 3 | Silver Plated Copper |
| Jacket Material | FEP |
| Jacket Diameter | 0.16 in [4.06 mm] |
| Repeated Minimum Bend Radius | 0.8 in [20.32 mm] |

Click the following link (or enter part number in “SEARCH” on website) to obtain additional part information including price, inventory and certifications: N Male to N Female Bulkhead Low Loss Cable 48 Inch Length Using ET-P160LL Coax ET28775

8th Floor, Building 1, Yongfu Science and Technology Center Industrial Park,
Nanzha District 5, Humen,523900, Dongguan, Guangdong, China.

Webstie:www.ebeestock.com Email:sales@ebeestock.com

© 2022 Ebeestock Enterprises All Rights Reserved

N Male to N Female Bulkhead Low Loss Cable 48 Inch Length Using ET38352 Coax

# RF Cable Assemblies Technical Data Sheet ET28775

### Connectors

| Description | Connector 1 | Connector 2 |
|---|---|---|
| Type | N Male | N Female Bulkhead |
| Impedance | 50 Ohms | 50 Ohms |
| Contact Material and Plating | Beryllium Copper, Gold | Beryllium Copper, Gold |
| Contact Plating Specification | ASTM-B488 | ASTM-B488 |
| Dielectric Type | PTFE | PTFE |
| Outer Conductor Material and Plating | | Passivated Stainless Steel |
| Body Material and Plating | Passivated Stainless Steel | Passivated Stainless Steel |
| Coupling Nut Material and Plating | Passivated Stainless Steel | |

## Environmental Specifications

**Temperature**

Operating Range -55 to +165 deg C

## Compliance Certifications (see product page for current document)

## Plotted and Other Data

Notes:

### Typical Performance Data

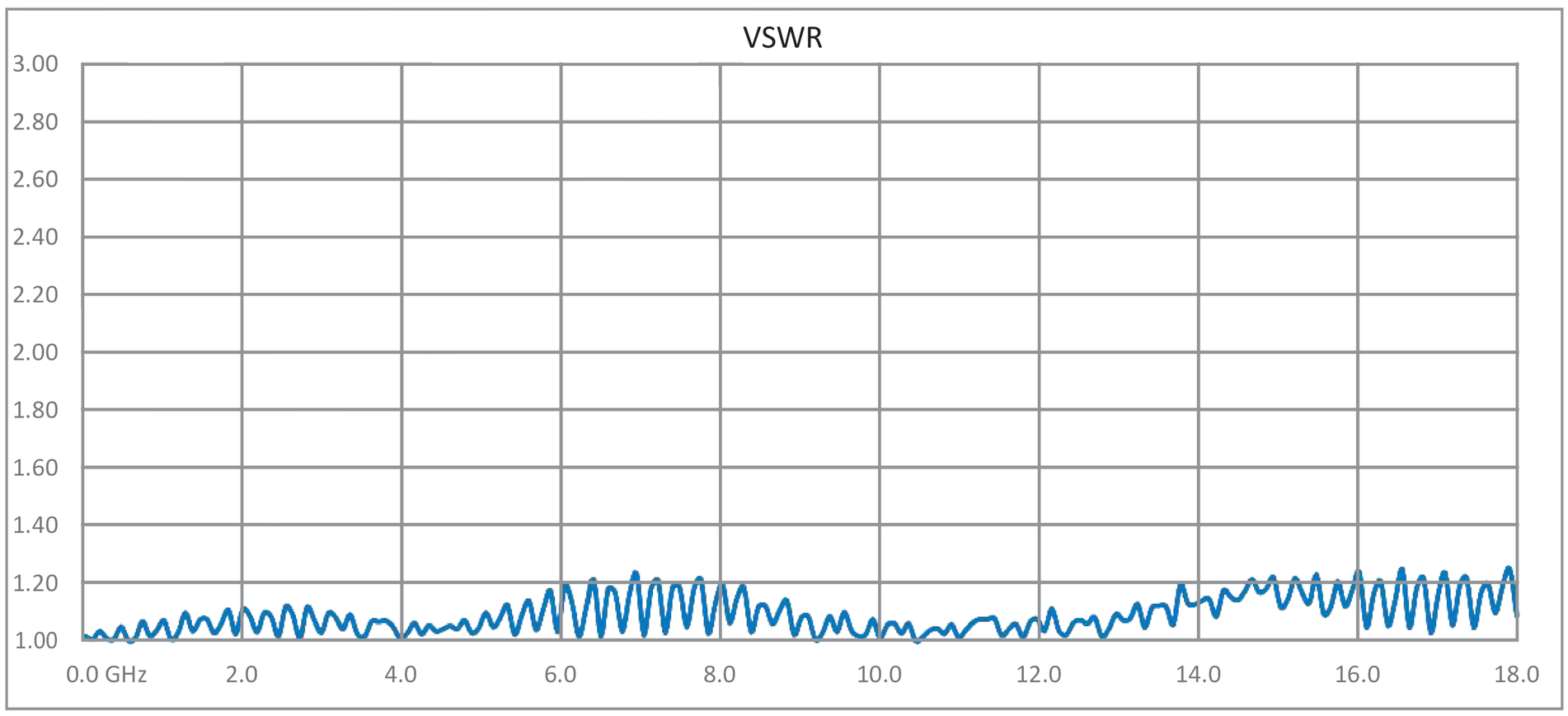


Click the following link (or enter part number in “SEARCH” on website) to obtain additional part information including price, inventory and certifications: N Male to N Female Bulkhead Low Loss Cable 48 Inch Length Using ET-P160LL Coax ET28775

8th Floor, Building 1, Yongfu Science and Technology Center Industrial Park,
Nanzha District 5, Humen,523900, Dongguan, Guangdong, China.

Webstie:www.ebeestock.com Email:sales@ebeestock.com

© 2022 Ebeestock Enterprises All Rights Reserved

N Male to N Female Bulkhead Low Loss Cable 48 Inch Length Us
ing ET38352 Coax

## RF Cable Assemblies Technical Data Sheet ET28775

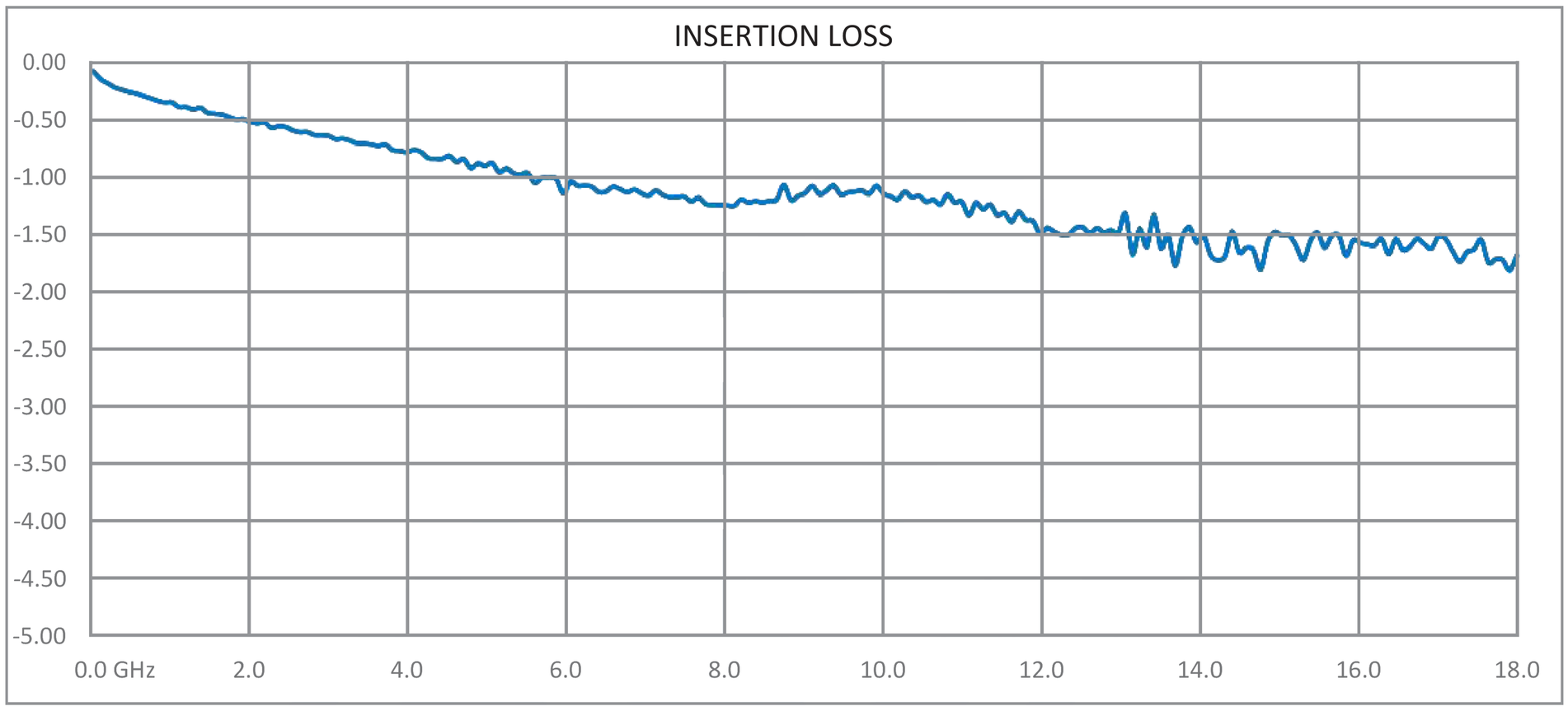


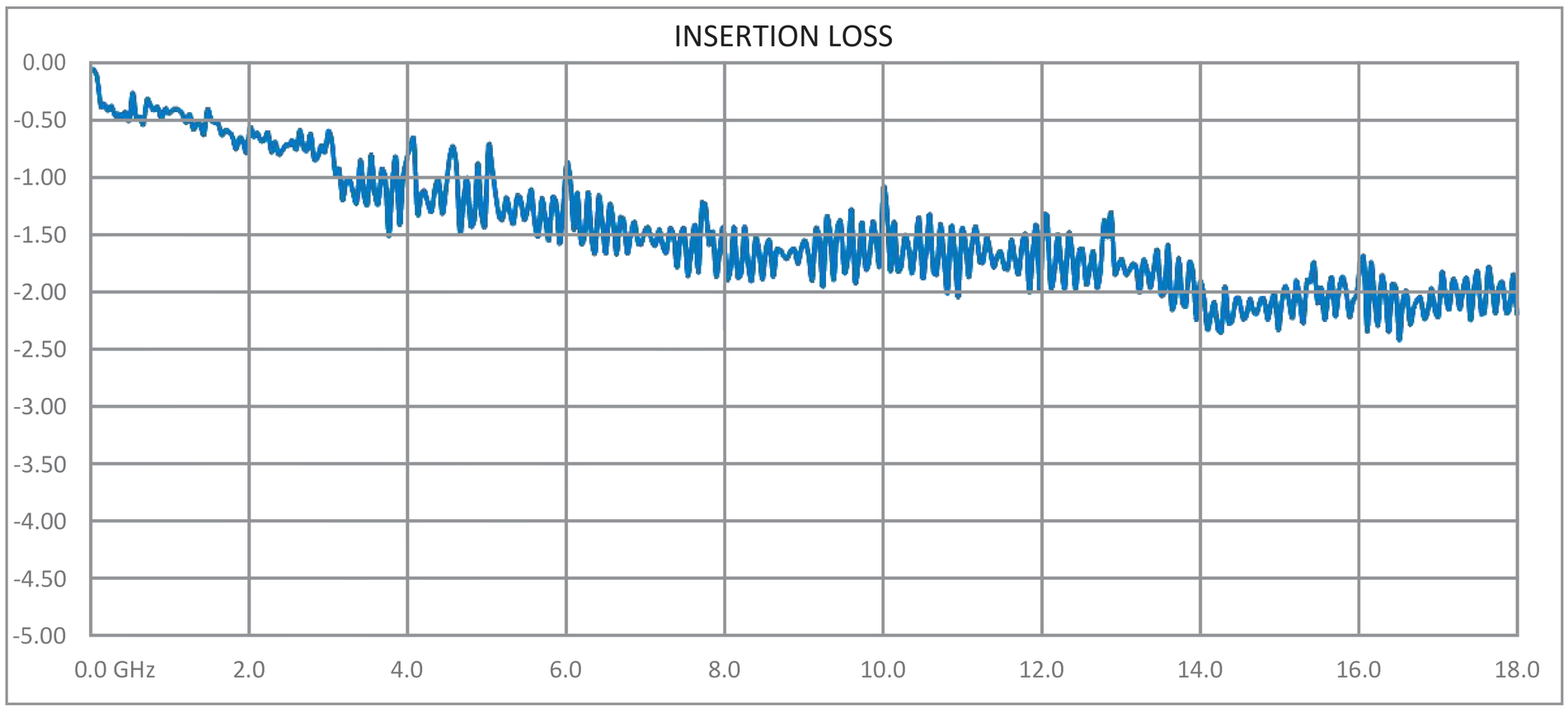


Click the following link (or enter part number in “SEARCH” on website) to obtain additional part information including price, inventory and certifications: N Male to N Female Bulkhead Low Loss Cable 48 Inch Length Using ET-P160LL Coax ET28775

8th Floor, Building 1, Yongfu Science and Technology Center Industrial Park,
Nanzha District 5, Humen,523900, Dongguan, Guangdong, China.

Webstie:www.ebeestock.com Email:sales@ebeestock.com

© 2022 Ebeestock Enterprises All Rights Reserved

N Male to N Female Bulkhead Low Loss Cable 48 Inch Length Using ET38352 Coax

# RF Cable Assemblies Technical Data Sheet ET28775

## How to Order

Part Number Configuration: **ET3C5257 - xx uu**

- ET3C5257 — Base Number
- xx — Length
- uu — Unit of Measure:
  - cm = Centimeters
  - <blank> = Inches

Example: ET3C5257-12 = 12 inches long cable
ET3C5257-100cm = 100 cm long cable

N Male to N Female Bulkhead Low Loss Cable 48 Inch Length Using ET-P160LL Coax from Ebeestock Enterprises has same day shipment for domestic and International orders. Our RF, microwave and millimeter wave products maintain a 99.4% availability and are part of the broadest selection in the industry.

Click the following link (or enter part number in “SEARCH” on website) to obtain additional part information including price, inventory and certifications: N Male to N Female Bulkhead Low Loss Cable 48 Inch Length Using ET-P160LL Coax ET28775

**URL:** https://www.ebeestock.com/n-male-to-n-female-bulkhead-low-loss-cable-12-inch-length-using-pe-p160ll-coax-0028772

The information contained in this document is accurate to the best of our knowledge and representative of the part described herein. It may be necessary to make modifications to the part and/or the documentation of the part, in order to implement improvements. Ebeestock reserves the right to make such changes as required. Unless otherwise stated, all specifications are nominal. Ebeestock does not make any representation or warranty regarding the suitability of the part described herein for any particular purpose, and Ebeestock does not assume any liability arising out of the use of any part or documentation.

8th Floor, Building 1, Yongfu Science and Technology Center Industrial Park,
Nanzha District 5, Humen,523900, Dongguan, Guangdong, China.

Webstie:www.ebeestock.com Email:sales@ebeestock.com

© 2022 Ebeestock Enterprises All Rights Reserved

© 2022 Ebeestock Enterprises All Rights Reserved



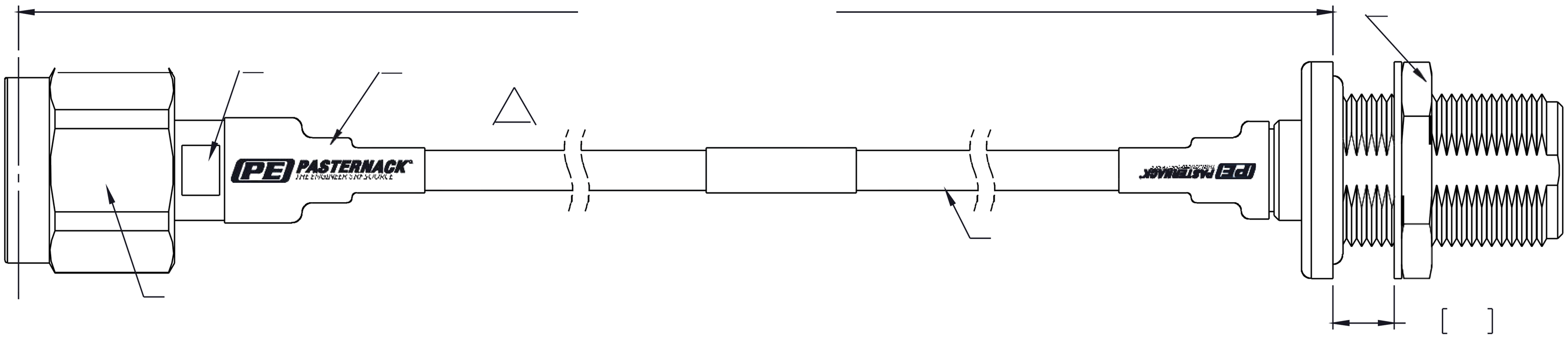


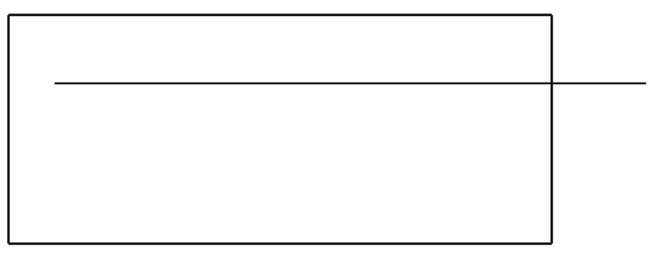

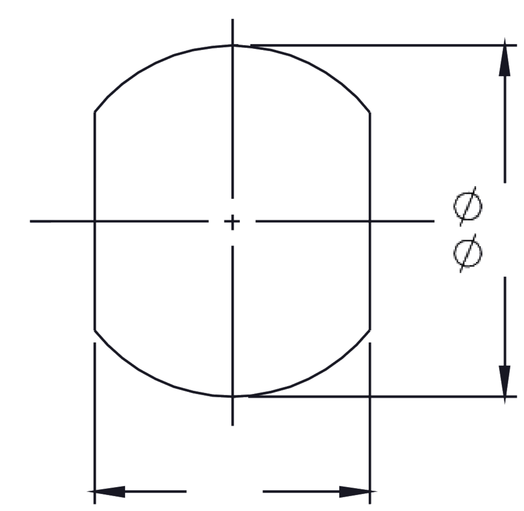


*STANDARD TOLERANCES APPLY
ONLY TO DIMENSIONS IN INCHES

ebeestock
Ebeestock.com
8th Floor, Building 1, Yongfu Science
and Technology Center Industrial Park,
Nanzha District 5, Humen,523900, Dongguan, Guangdong, China.
**Webstie:** www.ebeestock.com **Email:** sales@ebeestock.com

DWG TITLE

NOTES:
1. UNLESS OTHERWISE SPECIFIED ALL DIMENSIONS ARE NOMINAL.
2. ALL SPECIFICATIONS ARE SUBJECT TO CHANGE WITHOUT NOTICE AT ANY TIME
3. DIMENSIONS ARE IN INCHES [mm].

| CAGE CODE 53919 | CAD FILE | SCALE N/A | SIZE A | |
|---|---|---|---|---|