N Male Right Angle to TNC Female Bulkhead Low Loss Cable 36 Inch Length Using ET38352 Coax

RF Cable Assemblies Technical Data Sheet

ET28900

Configuration

- Connector 1: N Male Right Angle
- Connector 2: TNC Female Bulkhead
- Cable Type: ET-P160LL

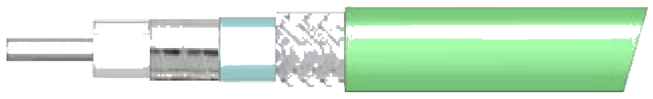

Features

- Max Frequency 18 GHz
- Shielding Effectivity > 90 dB
- 82.5% Phase Velocity
- Triple Shielded
- FEP Jacket
- 0.8 inch Minimum Bend Radius
- Max VSWR of 1.35:1 to 18 GHz
- Same Day Shipment of Custom Lengths
- RoHS and REACH Compliant

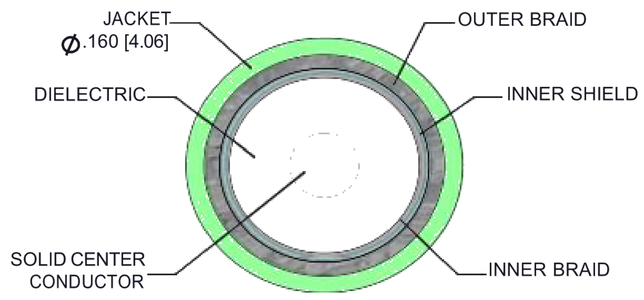

SECTION VIEW

Applications

- General Purpose
- Laboratory Use
- Automated Test Systems
- Airborne Systems
- Phased Arrays
- EW and Countermeasures

Description

The ET3C5273-12 N Male Right Angle to TNC Female Bulkhead Low Loss cable assembly is part of a series of cable assemblies that use our ET-P160LL double shielded coax. The ET-P160LL based cable assemblies are available in a variety of connector configurations operating to a maximum frequency for this cable series of 18 GHz. The ET3C5273-12 high performance cable assembly with a 82.5% phase velocity offers very low loss performance in a 0.16 inch coax up to 18 GHz. The shielding effectiveness of the ET-P160LL double shielded coax is greater than 95 dB. The durable stainless steel connectors and FEP cable jacket provide a cost effective design ideal for test environments where a rugged cable assembly is required. A heavy duty heat shrink booting provides improved strain relief and adds to the durability of the cable assembly.

Custom versions of most RF cable assemblies can be built and shipped same day. Custom cable assembly lengths can be obtained by specifying the desired length on the web site at time of order or by contacting a sales representative. Other available RF cable assembly value added services include connector orientation or clocking, heat shrink booting and custom labeling. RF testing can also be performed to document the electrical performance of your cable assembly.

Click the following link (or enter part number in “SEARCH” on website) to obtain additional part information including price, inventory and certifications: N Male Right Angle to TNC Female Bulkhead Low Loss Cable 36 Inch Length Using ET-P160LL Coax ET28900

8th Floor, Building 1, Yongfu Science and Technology Center Industrial Park,
Nanzha District 5, Humen,523900, Dongguan, Guangdong, China.

Webstie:www.ebeestock.com Email:sales@ebeestock.com

© 2022 Ebeestock Enterprises All Rights Reserved

N Male Right Angle to TNC Female Bulkhead Low Loss Cable 36 Inch Length Using ET38352 Coax

RF Cable Assemblies Technical Data Sheet ET28900

Electrical Specifications

Description	Minimum	Typical	Maximum	Units
Frequency Range	DC		18	GHz
VSWR			1.35:1	
Velocity of Propagation		82.5		%
RF Shielding	90			dB
Capacitance		25 [82.02]		pF/ft [pF/m]

Specifications by Frequency

Description	F1	F2	F3	F4	F5	Units
Frequency	1	2	4.5	9	18	GHz
Insertion Loss (Typ.)	0.44	0.63	0.95	1.37	1.97	dB

Electrical Specification Notes:
The Insertion Loss data above is based on the performance specifications of the coax cable used in this assembly. The Insertion Loss includes an estimated insertion loss of 0.04*SQRT(F(GHz))dB maximum for the straight connector and 0.10*SQRT(F(GHz))dB maximum for the right angle connector.

Mechanical Specifications

Cable Assembly

Length*	36 in [914.4 mm]

Cable

Cable Type	ET-P160LL
Impedance	50 Ohms
Inner Conductor Type	Solid
Inner Conductor Material and Plating	Copper, Silver
Dielectric Type	Expanded PTFE Tape
Number of Shields	3
Shield Layer 1	Silver Plated Copper
Shield Layer 2	Aluminum Polyester
Shield Layer 3	Silver Plated Copper
Jacket Material	FEP
Jacket Diameter	0.16 in [4.06 mm]
Repeated Minimum Bend Radius	0.8 in [20.32 mm]

Click the following link (or enter part number in “SEARCH” on website) to obtain additional part information including price, inventory and certifications: N Male Right Angle to TNC Female Bulkhead Low Loss Cable 36 Inch Length Using ET-P160LL Coax ET28900

8th Floor, Building 1, Yongfu Science and Technology Center Industrial Park,
Nanzha District 5, Humen,523900, Dongguan, Guangdong, China.

Webstie:www.ebeestock.com Email:sales@ebeestock.com

© 2022 Ebeestock Enterprises All Rights Reserved

N Male Right Angle to TNC Female Bulkhead Low Loss Cable 36 Inch Length Using ET38352 Coax

RF Cable Assemblies Technical Data Sheet ET28900

Connectors

Description	Connector 1	Connector 2
Type	N Male Right Angle	TNC Female Bulkhead
Impedance	50 Ohms	50 Ohms
Contact Material and Plating	Beryllium Copper, Gold	Beryllium Copper, Gold
Contact Plating Specification	ASTM-B488	ASTM-B488
Dielectric Type	PTFE	PTFE
Outer Conductor Material and Plating		Passivated Stainless Steel
Body Material and Plating	Passivated Stainless Steel	Passivated Stainless Steel
Coupling Nut Material and Plating	Passivated Stainless Steel	

Environmental Specifications

Temperature

Operating Range -55 to +165 deg C

Compliance Certifications (see product page for current document)

Plotted and Other Data

Notes:

Typical Performance Data

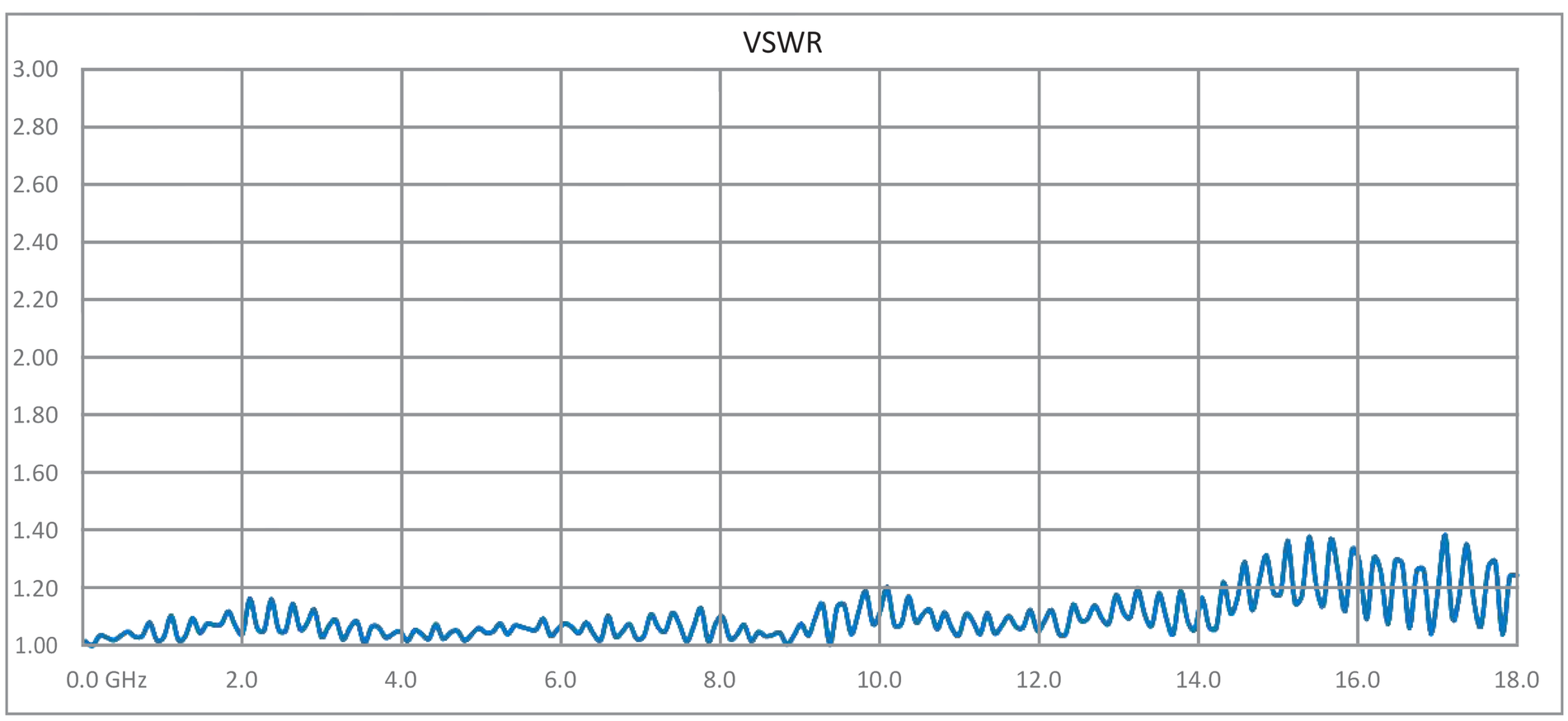

Click the following link (or enter part number in “SEARCH” on website) to obtain additional part information including price, inventory and certifications: N Male Right Angle to TNC Female Bulkhead Low Loss Cable 36 Inch Length Using ET-P160LL Coax ET28900

8th Floor, Building 1, Yongfu Science and Technology Center Industrial Park,
Nanzha District 5, Humen,523900, Dongguan, Guangdong, China.

Webstie:www.ebeestock.com Email:sales@ebeestock.com

© 2022 Ebeestock Enterprises All Rights Reserved

N Male Right Angle to TNC Female Bulkhead Low Loss Cable 36 Inch Length Using ET38352 Coax

RF Cable Assemblies Technical Data Sheet ET28900

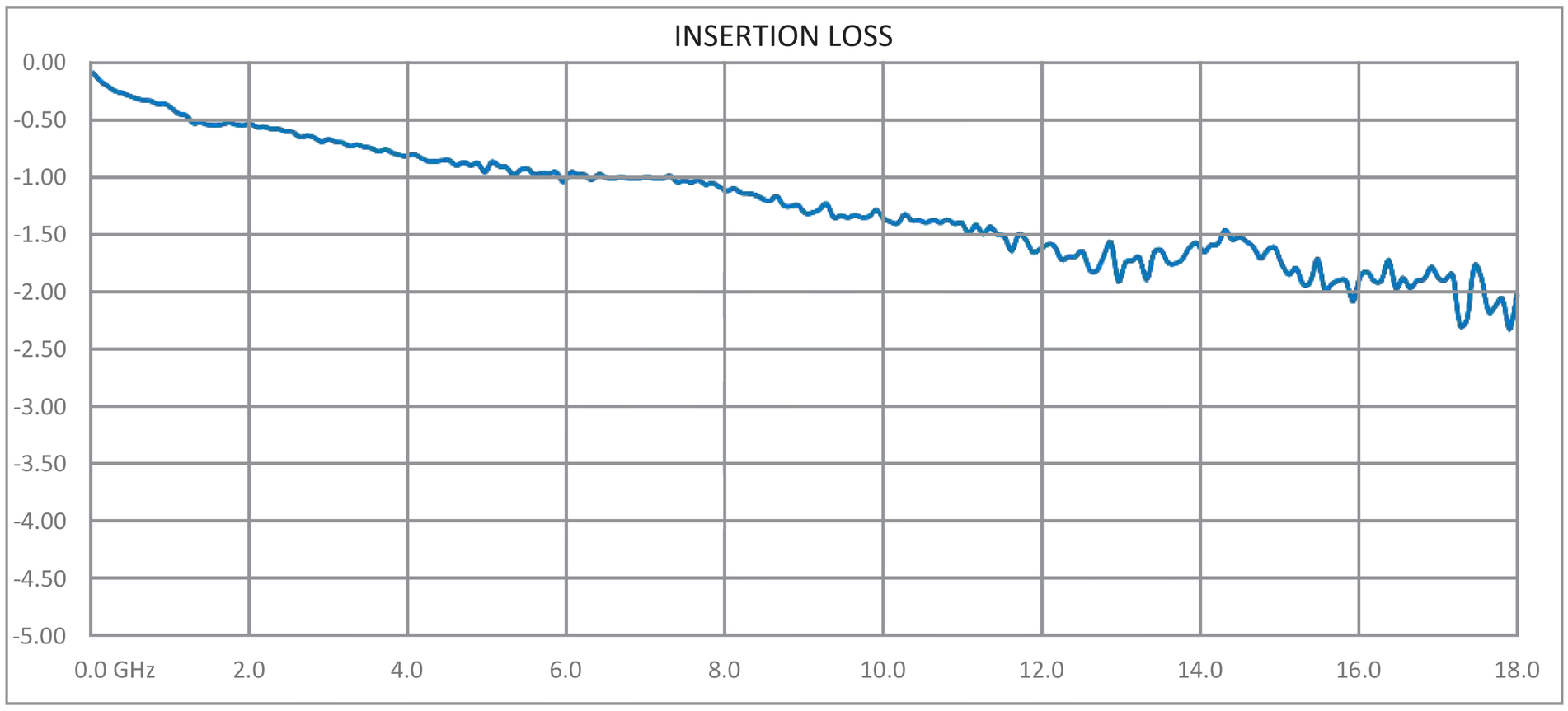

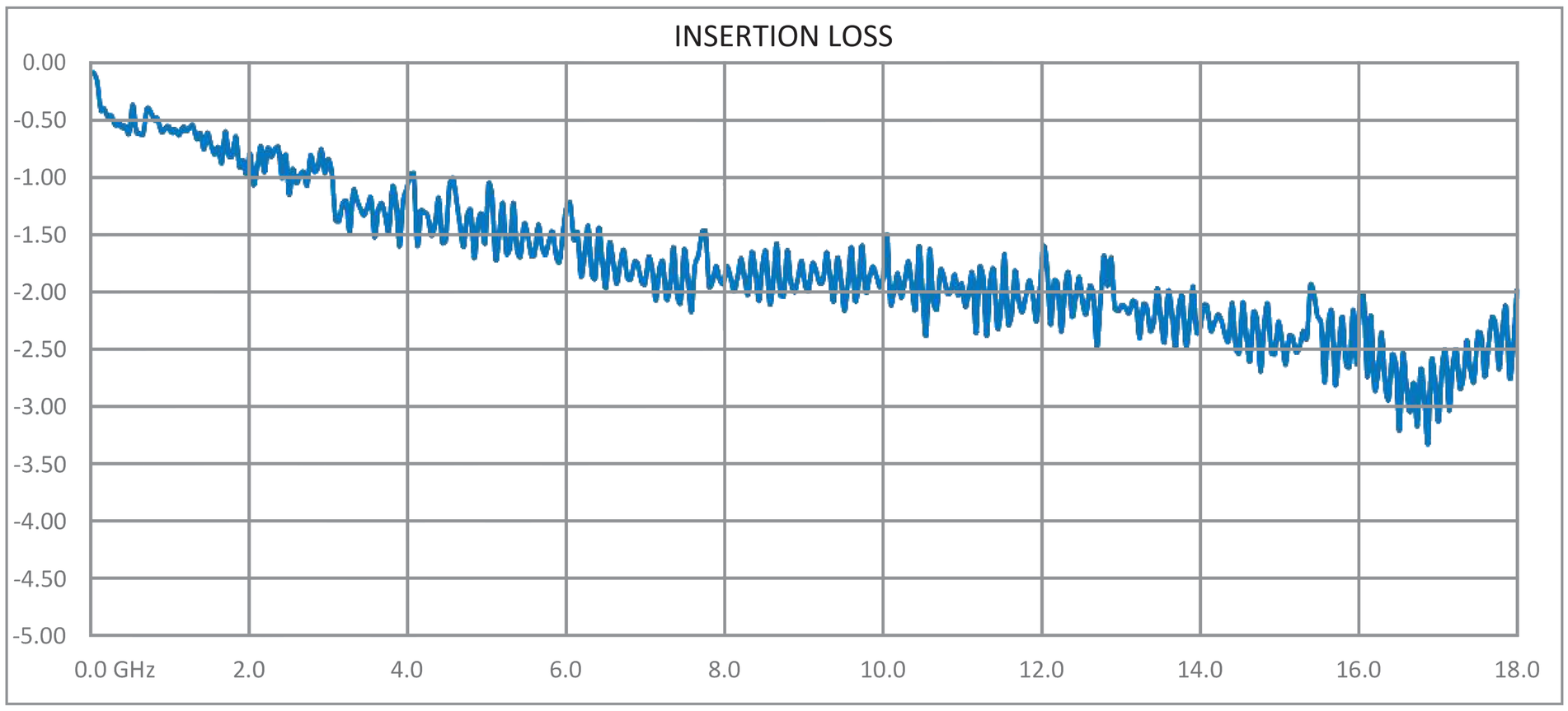

Click the following link (or enter part number in “SEARCH” on website) to obtain additional part information including price, inventory and certifications: N Male Right Angle to TNC Female Bulkhead Low Loss Cable 36 Inch Length Using ET-P160LL Coax ET28900

8th Floor, Building 1, Yongfu Science and Technology Center Industrial Park,
Nanzha District 5, Humen,523900, Dongguan, Guangdong, China.

Webstie:www.ebeestock.com Email:sales@ebeestock.com

© 2022 Ebeestock Enterprises All Rights Reserved

N Male Right Angle to TNC Female Bulkhead Low Loss Cable 36 Inch Length Using ET38352 Coax

RF Cable Assemblies Technical Data Sheet ET28900

How to Order

Part Number Configuration: **ET3C5283 - xx uu**

- ET3C5283 — Base Number
- xx — Length
- uu — Unit of Measure:
  - cm = Centimeters
  - <blank> = Inches

Example: ET3C5283-12 = 12 inches long cable
ET3C5283-100cm = 100 cm long cable

N Male Right Angle to TNC Female Bulkhead Low Loss Cable 36 Inch Length Using ET-P160LL Coax from Ebeestock Enterprises has same day shipment for domestic and International orders. Our RF, microwave and millimeter wave products maintain a 99.4% availability and are part of the broadest selection in the industry.

Click the following link (or enter part number in “SEARCH” on website) to obtain additional part information including price, inventory and certifications: N Male Right Angle to TNC Female Bulkhead Low Loss Cable 36 Inch Length Using ET-P160LL Coax ET28900

URL: https://www.ebeestock.com/n-male-right-angle-to-tnc-female-bulkhead-low-loss-cable-12-inch-length-using-pe-p160ll-coax-0028898

The information contained in this document is accurate to the best of our knowledge and representative of the part described herein. It may be necessary to make modifications to the part and/or the documentation of the part, in order to implement improvements. Ebeestock reserves the right to make such changes as required. Unless otherwise stated, all specifications are nominal. Ebeestock does not make any representation or warranty regarding the suitability of the part described herein for any particular purpose, and Ebeestock does not assume any liability arising out of the use of any part or documentation.

8th Floor, Building 1, Yongfu Science and Technology Center Industrial Park,
Nanzha District 5, Humen,523900, Dongguan, Guangdong, China.

Webstie:www.ebeestock.com Email:sales@ebeestock.com

© 2022 Ebeestock Enterprises All Rights Reserved

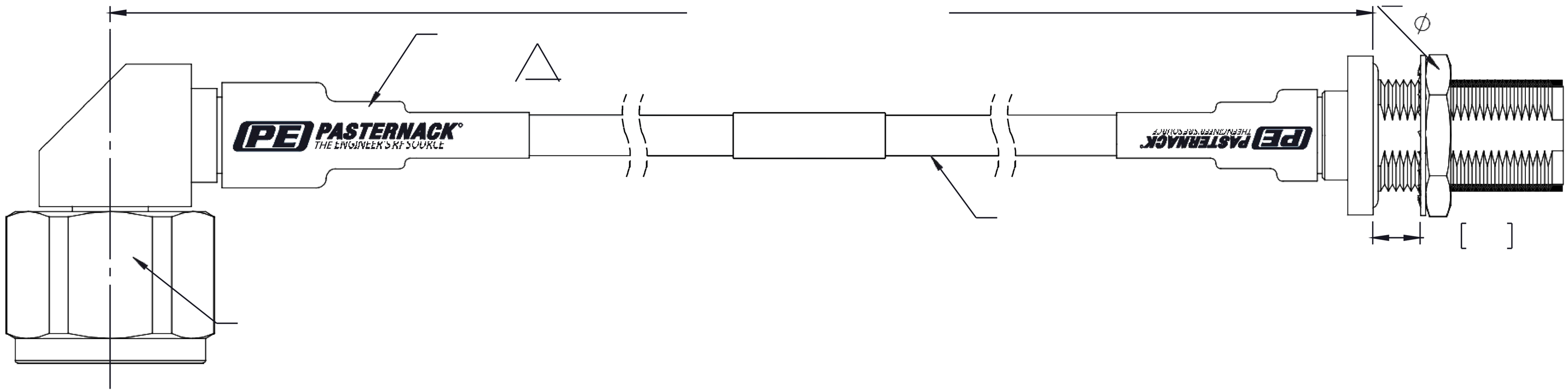

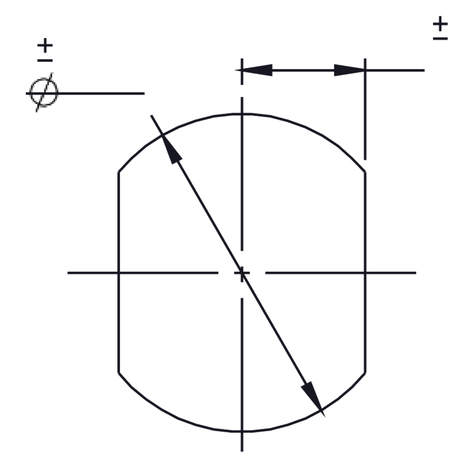

*STANDARD TOLERANCES APPLY
ONLY TO DIMENSIONS IN INCHES

ebeestock
Ebeestock.com
8th Floor, Building 1, Yongfu Science
and Technology Center Industrial Park,
Nanzha District 5, Humen,523900, Dongguan, Guangdong, China.
Webstie: www.ebeestock.com **Email:** sales@ebeestock.com

DWG TITLE

NOTES:
1. UNLESS OTHERWISE SPECIFIED ALL DIMENSIONS ARE NOMINAL.
2. ALL SPECIFICATIONS ARE SUBJECT TO CHANGE WITHOUT NOTICE AT ANY TIME
3. DIMENSIONS ARE IN INCHES [mm].

CAGE CODE 53919	CAD FILE	SCALE N/A	SIZE A	

© 2022 Ebeestock Enterprises All Rights Reserved