Plenum N Female Bulkhead to NEX10 Male Low PIM Cable 36 Inch Length Using ET38365 Coax Using Times Microwave Parts

RF Cable Assemblies Technical Data Sheet

PE3C6255-36

Configuration

- Connector 1: TC-SPP250-NF-BH-LP
  N Female Bulkhead
- Connector 2: TC-250-XNM-LP
  NEX10 Male
- Cable: ET38365

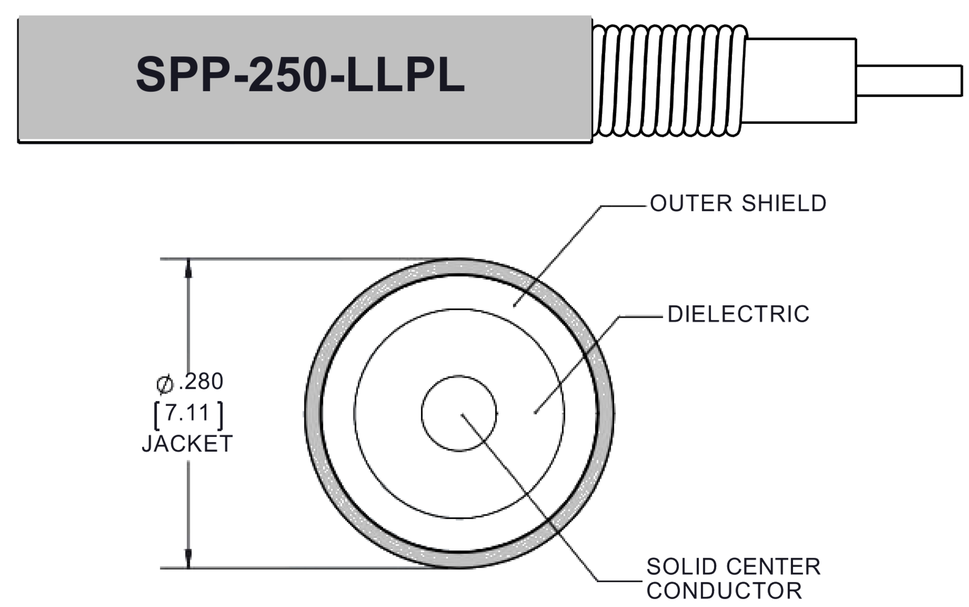

Features

- Max Frequency 5.8 GHz
- Low PIM: -160 dBc Max
- Shielding Effectivity > 100 dB
- 76% Phase Velocity
- FEP Jacket
- 100% Tested with PIM Test Results Marked on Cable
- UL910 Plenum Rated Cable
- Lightweight and Extremely Flexible
- Low Loss with Excellent VSWR
- IP67 (when mated)
- Using Times Microwave Components

Applications

- General Purpose
- Laboratory Use
- Low PIM Applications
- Distributed Antenna Systems (DAS)
- Plenum Installations
- Multi-Carrier Communication Systems
- PIM Testing

Description

Ebeestock's ET28945 type N female bulkhead to NEX10 male 36 inch cable using ET38365 coax is part of our full line of RF components available for same-day shipping. Ebeestock's corrugated RF cable assemblies are ideal for applications where durability and high power are needed. This Ebeestock type N to NEX10 cable assembly has a female to male gender configuration with 50 ohm corrugated ET38365 coax. The ET28945 type N female to NEX10 male cable assembly operates to 5.8 GHz. Our low PIM design also offers excellent passive intermodulation performance with PIM levels better than -160 dBc. Our RF cable assembly with type N bulkhead interface allows designers to create external connections on their product enclosures, and can be used in a variety of other rack mount and panel mount applications. Times Microwave cable is used in each assembly and TMS components are used to form connections with the super flexible low PIM cable. These cable assemblies are expertly built to satisfy your specific need with high quality Times Microwave Systems manufactured parts.

Custom versions of most RF cable assemblies can be built and shipped same day. Custom cable assembly lengths can be obtained by specifying the desired length on the web site at time of order or by contacting a sales representative. Other available RF cable assembly value added services include connector orientation or clocking, heat shrink booting and custom labeling. RF testing can also be performed to document the electrical performance of your cable assembly.

Click the following link (or enter part number in "SEARCH" on website) to obtain additional part information including price, inventory and certifications: Plenum N Female Bulkhead to NEX10 Male Low PIM Cable 36 Inch Length Using SPP-250-LLPL Coax Using Times Microwave Parts ET28945

8th Floor, Building 1, Yongfu Science and Technology Center Industrial Park,
Nanzha District 5, Humen,523900, Dongguan, Guangdong, China.

Webstie:www.ebeestock.com Email:sales@ebeestock.com

© 2022 Ebeestock Enterprises All Rights Reserved

Plenum N Female Bulkhead to NEX10 Male Low PIM Cable 36 Inch Length Using ET38365 Coax Using Times Microwave Parts

RF Cable Assemblies Technical Data Sheet

PE3C6255-36

Electrical Specifications

Description	Minimum	Typical	Maximum	Units
Frequency Range	DC		5.8	GHz
VSWR			1.4:1	
Velocity of Propagation		76		%
RF Shielding	100			dB
Passive Intermodulation		-165	-160	dBc
Capacitance		27 [88.58]		pF/ft [pF/m]
Inductance		0.067 [0.22]		uH/ft [uH/m]
DC Resistance Inner Conductor		3 [9.84]		Ω/1000ft [Ω/Km]

Specifications by Frequency

Description	F1	F2	F3	F4	F5	Units
Frequency	0.45	0.7	1	2.5	5.8	GHz
Insertion Loss (Max.)	0.29	0.34	0.38	0.55	0.8	dB

Electrical Specification Notes:
PIM test results vary between cables
The Insertion Loss data above is based on the performance specifications of the coax used in this assembly. The Insertion Loss includes an estimated insertion loss of 0.1 dB for the female connector and 0.1*SQRT(FGHz) dB for the male connector.

Mechanical Specifications

Cable Assembly

Description	Minimum	Typical	Maximum	Units
Length		36.0 [914.4]		in [mm]
Jacket Diameter		0.28 [7.11]		in [mm]
One Time Minimum Bend Radius	1.25			in
Bending Moment		0.8		lbs-ft

Click the following link (or enter part number in “SEARCH” on website) to obtain additional part information including price, inventory and certifications: Plenum N Female Bulkhead to NEX10 Male Low PIM Cable 36 Inch Length Using SPP-250-LLPL Coax Using Times Microwave Parts ET28945

8th Floor, Building 1, Yongfu Science and Technology Center Industrial Park,
Nanzha District 5, Humen,523900, Dongguan, Guangdong, China.

Webstie:www.ebeestock.com Email:sales@ebeestock.com

© 2022 Ebeestock Enterprises All Rights Reserved

Plenum N Female Bulkhead to NEX10 Male Low PIM Cable 36 Inch Length Using ET38365 Coax Using Times Microwave Parts

RF Cable Assemblies Technical Data Sheet PE3C6255-36

Cable Characteristics

Description	Specification
Cable Type	ET38365
Impedance	50 Ohms
Inner Conductor Type	Solid
Inner Conductor Material and Plating	Copper
Dielectric Type	PTFE
Number of Shields	1
Shield Layer 1	Helically Corrugated Copper Tube
Outer Conductor Material and Plating	Copper
Outer Conductor Diameter	0.25 in [6.35mm]
Jacket Material	FEP, Blue

Connector Characteristics

Description	Connector 1	Connector 2
Type	N Female Bulkhead	NEX10 Male
Impedance	50 Ohms	50 Ohms
Mating Cycles		500
Contact Material and Plating	Phosphor Bronze, Silver	Brass, Silver
Contact Plating Specification	196µ in	100 µin
Dielectric Type	PTFE	PTFE
Outer Conductor Material and Plating	Brass, Tri-Metal	
Outer Conductor Plating Specification	118µ in	
Body Material and Plating	Brass, Tri-Metal	Brass, Tri-Metal
Body Plating Specification	118µ in	100 µin
Coupling Nut Material and Plating		Brass, Tri-Metal
Coupling Nut Plating Specification		100 µin
Torque	10 in-lbs 1.13 Nm	13.28 in-lbs 1.5 Nm

Mechanical Specification Notes:

Click the following link (or enter part number in “SEARCH” on website) to obtain additional part information including price, inventory and certifications: Plenum N Female Bulkhead to NEX10 Male Low PIM Cable 36 Inch Length Using SPP-250-LLPL Coax Using Times Microwave Parts ET28945

8th Floor, Building 1, Yongfu Science and Technology Center Industrial Park,
Nanzha District 5, Humen,523900, Dongguan, Guangdong, China.

Webstie:www.ebeestock.com Email:sales@ebeestock.com

© 2022 Ebeestock Enterprises All Rights Reserved

Plenum N Female Bulkhead to NEX10 Male Low PIM Cable 36 Inch Length Using ET38365 Coax Using Times Microwave Parts

RF Cable Assemblies Technical Data Sheet PE3C6255-36

Environmental Specifications

Description	Specification
Temperature Operating Range	-55 to +200 deg C
Temperature Storage Range	-55 to +200 deg C
Plenum Rating	UL910

Compliance Certifications (see product page for current document)

Plotted and Other Data

Notes:

- Values at 25°C, sea level.

Typical Performance Data

Click the following link (or enter part number in “SEARCH” on website) to obtain additional part information including price, inventory and certifications: Plenum N Female Bulkhead to NEX10 Male Low PIM Cable 36 Inch Length Using SPP-250-LLPL Coax Using Times Microwave Parts ET28945

8th Floor, Building 1, Yongfu Science and Technology Center Industrial Park,
Nanzha District 5, Humen,523900, Dongguan, Guangdong, China.

Webstie:www.ebeestock.com Email:sales@ebeestock.com

© 2022 Ebeestock Enterprises All Rights Reserved

Plenum N Female Bulkhead to NEX10 Male Low PIM Cable 36 Inch Length Using ET38365 Coax Using Times Microwave Parts

RF Cable Assemblies Technical Data Sheet

PE3C6255-36

How to Order

Part Number Configuration: **ET3C6255 - xx uu**

- **uu** — Unit of Measure:
  - cm = Centimeters
  - <blank> = Inches
- **xx** — Length
- **ET3C6255** — Base Number

Example: ET3C6255-12 = 12 inches long cable
ET3C6255-100cm = 100 cm long cable

Plenum N Female Bulkhead to NEX10 Male Low PIM Cable 36 Inch Length Using ET38365 Coax Using Times Microwave Parts from Ebeestock Enterprises has same day shipment for domestic and International orders. Our RF, microwave and millimeter wave products maintain a 99.4% availability and are part of the broadest selection in the industry.

Click the following link (or enter part number in “SEARCH” on website) to obtain additional part information including price, inventory and certifications: Plenum N Female Bulkhead to NEX10 Male Low PIM Cable 36 Inch Length Using SPP-250-LLPL Coax Using Times Microwave Parts ET28945

URL: https://www.ebeestock.com/plenum-n-female-bulkhead-to-nex10-male-low-pim-cable-12-inch-length-using-spp-250-llpl-coax-using-times-microwave-parts-0028943

The information contained in this document is accurate to the best of our knowledge and representative of the part described herein. It may be necessary to make modifications to the part and/or the documentation of the part, in order to implement improvements. Ebeestock reserves the right to make such changes as required. Unless otherwise stated, all specifications are nominal. Ebeestock does not make any representation or warranty regarding the suitability of the part described herein for any particular purpose, and Ebeestock does not assume any liability arising out of the use of any part or documentation.

8th Floor, Building 1, Yongfu Science and Technology Center Industrial Park,
Nanzha District 5, Humen,523900, Dongguan, Guangdong, China.

Webstie:www.ebeestock.com Email:sales@ebeestock.com

© 2022 Ebeestock Enterprises All Rights Reserved

REVISIONS

REV.	DESCRIPTION	DATE	APPROVED
A	INITIAL RELEASE	04/09/19	S.ELLIS

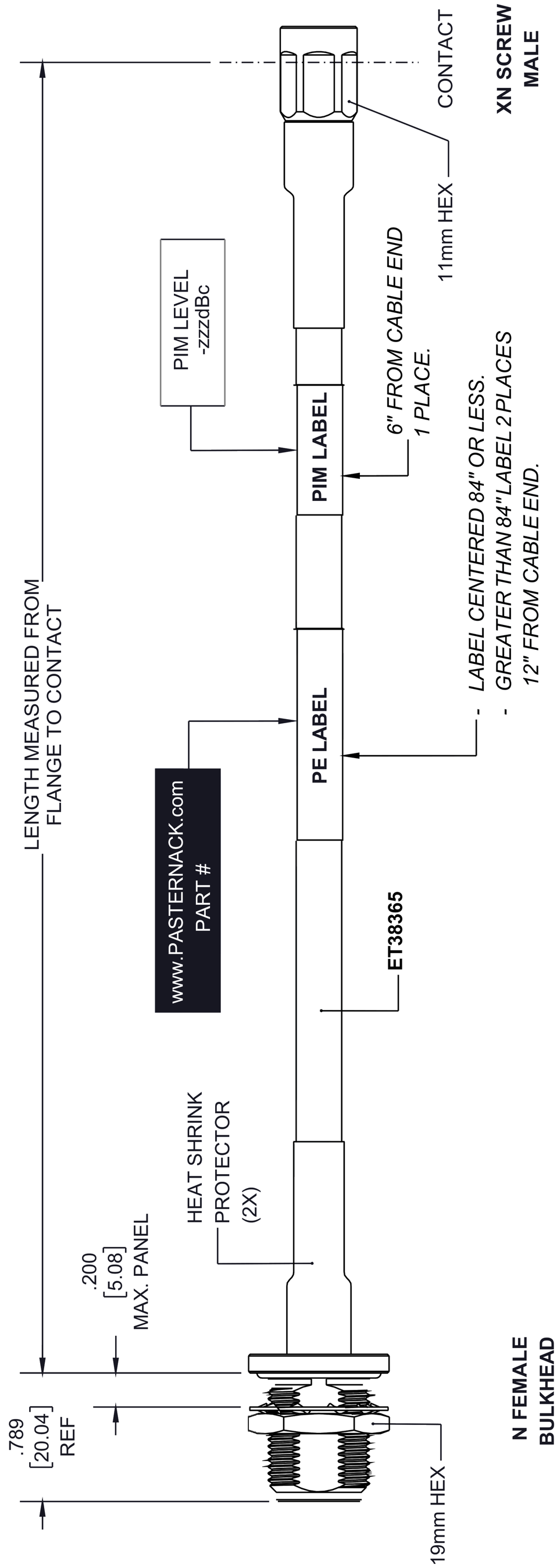

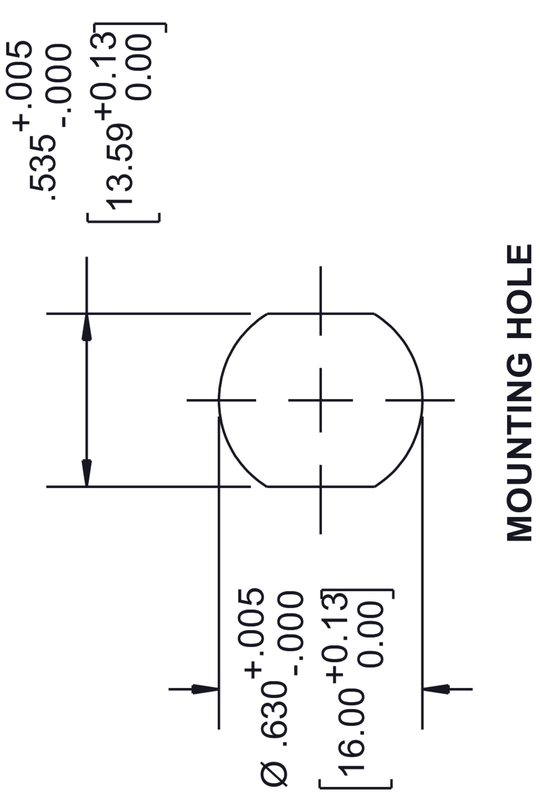

THE INFORMATION AND DESIGN IN THIS DOCUMENT IS THE PROPERTY OF Ebeestock CORPORATION. ALL RIGHTS RESERVED.

PASTERNACK
an INFINITE brand
8th Floor, Building 1, Yongfu Science and Technology Center Industrial Park
P.O.Box 16759, Irvine, CA 92623.
Phone: 1.949.261.1920 | 1.866.727.8376
Fax: 1.949.261.7451
e-mail: sales@Ebeestock.com

SHEET 1 OF 1

SCALE N/A

REV A

PART NUMBER ET3C6255

DRAWN BY K DANG

CAGE 53919

SIZE A

UNLESS OTHERWISE SPECIFIED
LEADING DIMENSIONS ARE INCHES
DIMENSIONS IN [ ] ARE MILLIMETERS

TOLERANCES:

.X=± .2 [5.08] FRACTIONS

.XX=± .01 [.25] ± 1/32

.XXX=± .005 [.13] ANGLES ± 1°

ALL DIMENSIONS SHOWN ARE FOR REFERENCE ONLY.

THIRD ANGLE PROJECTION

THESE COMMODITIES, TECHNOLOGY OR SOFTWARE WERE EXPORTED FROM THE UNITED STATES IN ACCORDANCE WITH THE EXPORT ADMINISTRATION REGULATIONS. DIVERSION CONTRARY TO U.S. LAW PROHIBITED.

T-Rev.B

© 2022 Ebeestock Enterprises All Rights Reserved