Fire Rated N Male to NEX10 Male Low PIM Cable 24 Inch Length Using SPF-250 Coax Using Times Microwave Parts

RF Cable Assemblies Technical Data Sheet

ET28963

Configuration

- Connector 1: N Male
- Connector 2: NEX10 Male
- Cable Type: SPF-250

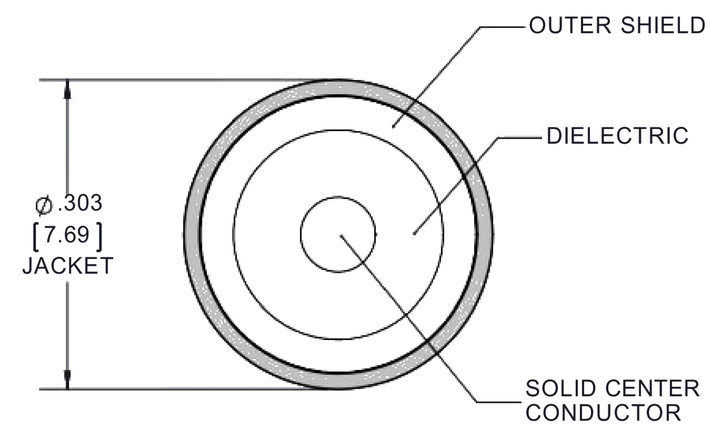

Features

- Max Frequency 5.8 GHz
- Low PIM: -160 dBc Max
- 83% Phase Velocity
- FRPE Jacket
- 500 Mating Cycles
- 100% Tested with PIM Test Results Marked on Cable
- Lightweight and Extremely Flexible
- Low Loss with Excellent VSWR
- IP67 (when mated)
- Using Times Microwave Components

Applications

- General Purpose
- Laboratory Use
- Low PIM Applications
- Distributed Antenna Systems (DAS)
- Multi-Carrier Communication Systems
- PIM Testing

Description

Ebeestock's ET28963 type N male to NEX10 male 24 inch cable using SPF-250 coax is part of our full line of RF components available for same-day shipping. Ebeestock's corrugated RF cable assemblies are ideal for applications where durability and high power are needed. This Ebeestock type N to NEX10 cable assembly has a male to male gender configuration with 50 ohm corrugated SPF-250 coax. The ET28963 type N male to NEX10 male cable assembly operates to 5.8 GHz. Our low PIM design also offers excellent passive intermodulation performance with PIM levels better than -160 dBc. Times Microwave cable is used in each assembly and TMS components are used to form connections with the super flexible low PIM cable. These cable assemblies are expertly built to satisfy your specific need with high quality Times Microwave Systems manufactured parts.

Custom versions of most RF cable assemblies can be built and shipped same day. Custom cable assembly lengths can be obtained by specifying the desired length on the web site at time of order or by contacting a sales representative. Other available RF cable assembly value added services include connector orientation or clocking, heat shrink booting and custom labeling. RF testing can also be performed to document the electrical performance of your cable assembly.

Click the following link (or enter part number in "SEARCH" on website) to obtain additional part information including price, inventory and certifications: Fire Rated N Male to NEX10 Male Low PIM Cable 24 Inch Length Using SPF-250 Coax Using Times Microwave Parts ET28963

8th Floor, Building 1, Yongfu Science and Technology Center Industrial Park,
Nanzha District 5, Humen,523900, Dongguan, Guangdong, China.

Webstie:www.ebeestock.com Email:sales@ebeestock.com

© 2022 Ebeestock Enterprises All Rights Reserved

Fire Rated N Male to NEX10 Male Low PIM Cable 24 Inch Length Using SPF-250 Coax Using Times Microwave Parts

RF Cable Assemblies Technical Data Sheet ET28963

Electrical Specifications

Description	Minimum	Typical	Maximum	Units
Frequency Range	DC		5.8	GHz
VSWR			1.4:1	
Velocity of Propagation		83		%
Passive Intermodulation		-165	-160	dBc
Capacitance		24 [78.74]		pF/ft [pF/m]
Inductance		0.054 [0.18]		uH/ft [uH/m]

Specifications by Frequency

Description	F1	F2	F3	F4	F5	Units
Frequency	0.45	0.7	1	2.5	5.8	GHz
Insertion Loss (Max.)	0.22	0.27	0.33	0.53	0.82	dB

Electrical Specification Notes:
PIM test results vary between cables
The Insertion Loss data above is based on the performance specifications of the coax used in this assembly. The Insertion Loss includes an estimated insertion loss of 0.1*SQRT(FGHz) dB per connector.

Mechanical Specifications

Cable Assembly

Length*	24 in [609.6 mm]
Diameter	0.63 in [16 mm]

Cable

Cable Type	SPF-250
Impedance	50 Ohms
Inner Conductor Type	Solid
Inner Conductor Material and Plating	Copper Clad Aluminum
Dielectric Type	Foam PE
Number of Shields	1
Shield Layer 1	Helically Corrugated Copper Tube
Outer Conductor Material and Plating	Copper
Jacket Material	FRPE, Black
Jacket Diameter	0.303 in [7.7 mm]
One Time Minimum Bend Radius	1.25 in [31.75 mm]
Bending Moment	0.5 lbs-ft [0.68 N-m]

Click the following link (or enter part number in “SEARCH” on website) to obtain additional part information including price, inventory and certifications: Fire Rated N Male to NEX10 Male Low PIM Cable 24 Inch Length Using SPF-250 Coax Using Times Microwave Parts ET28963

8th Floor, Building 1, Yongfu Science and Technology Center Industrial Park,
Nanzha District 5, Humen,523900, Dongguan, Guangdong, China.

Webstie:www.ebeestock.com Email:sales@ebeestock.com

© 2022 Ebeestock Enterprises All Rights Reserved

Fire Rated N Male to NEX10 Male Low PIM Cable 24 Inch Length Using SPF-250 Coax Using Times Microwave Parts

RF Cable Assemblies Technical Data Sheet ET28963

Connectors

Description	Connector 1	Connector 2
Type	N Male	NEX10 Male
Impedance	50 Ohms	50 Ohms
Mating Cycles	500	500
Contact Material and Plating	Brass, Silver	Brass, Silver
Contact Plating Specification	200 µin	100 µin
Dielectric Type	PTFE	PTFE
Body Material and Plating	Brass, Tri-Metal	Brass, Tri-Metal
Body Plating Specification	80 µin	100 µin
Coupling Nut Material and Plating	Brass, Tri-Metal	Brass, Tri-Metal
Coupling Nut Plating Specification	80 µin	100 µin
Torque	9.74 in-lbs [1.1 Nm]	13.28 in-lbs [1.5 Nm]

Mechanical Specification Notes:
*All cable assemblies have a length tolerance of 1.5% or ± 3/8”, whichever is greater.

Environmental Specifications

Temperature

Operating Range	-55 to +200 deg C
Storage Range	-55 to +200 deg C

Environmental Specification Notes:
CMR (Riser) Fire Rated

Compliance Certifications (see product page for current document)

Plotted and Other Data

Notes:
- Values at 25°C, sea level.

Click the following link (or enter part number in “SEARCH” on website) to obtain additional part information including price, inventory and certifications: Fire Rated N Male to NEX10 Male Low PIM Cable 24 Inch Length Using SPF-250 Coax Using Times Microwave Parts ET28963

8th Floor, Building 1, Yongfu Science and Technology Center Industrial Park,
Nanzha District 5, Humen,523900, Dongguan, Guangdong, China.

Webstie:www.ebeestock.com Email:sales@ebeestock.com

© 2022 Ebeestock Enterprises All Rights Reserved

Fire Rated N Male to NEX10 Male Low PIM Cable 24 Inch Length Using SPF-250 Coax Using Times Microwave Parts

RF Cable Assemblies Technical Data Sheet ET28963

Typical Performance Data

Click the following link (or enter part number in “SEARCH” on website) to obtain additional part information including price, inventory and certifications: Fire Rated N Male to NEX10 Male Low PIM Cable 24 Inch Length Using SPF-250 Coax Using Times Microwave Parts ET28963

8th Floor, Building 1, Yongfu Science and Technology Center Industrial Park,
Nanzha District 5, Humen,523900, Dongguan, Guangdong, China.

Webstie:www.ebeestock.com Email:sales@ebeestock.com

© 2022 Ebeestock Enterprises All Rights Reserved

Fire Rated N Male to NEX10 Male Low PIM Cable 24 Inch Length Using SPF-250 Coax Using Times Microwave Parts

RF Cable Assemblies Technical Data Sheet ET28963

How to Order

Part Number Configuration: **ET3C6362 - xx uu**

- ET3C6362 — Base Number
- xx — Length
- uu — Unit of Measure:
  - cm = Centimeters
  - <blank> = Inches

Example: ET3C6362-12 = 12 inches long cable
ET3C6362-100cm = 100 cm long cable

Fire Rated N Male to NEX10 Male Low PIM Cable 24 Inch Length Using SPF-250 Coax Using Times Microwave Parts from Ebeestock Enterprises has same day shipment for domestic and International orders. Our RF, microwave and millimeter wave products maintain a 99.4% availability and are part of the broadest selection in the industry.

Click the following link (or enter part number in “SEARCH” on website) to obtain additional part information including price, inventory and certifications: Fire Rated N Male to NEX10 Male Low PIM Cable 24 Inch Length Using SPF-250 Coax Using Times Microwave Parts ET28963

URL: https://www.ebeestock.com/fire-rated-n-male-to-nex10-male-low-pim-cable-12-inch-length-using-spf-250-coax-using-times-microwave-parts-0028962

The information contained in this document is accurate to the best of our knowledge and representative of the part described herein. It may be necessary to make modifications to the part and/or the documentation of the part, in order to implement improvements. Ebeestock reserves the right to make such changes as required. Unless otherwise stated, all specifications are nominal. Ebeestock does not make any representation or warranty regarding the suitability of the part described herein for any particular purpose, and Ebeestock does not assume any liability arising out of the use of any part or documentation.

8th Floor, Building 1, Yongfu Science and Technology Center Industrial Park,
Nanzha District 5, Humen,523900, Dongguan, Guangdong, China.

Webstie:www.ebeestock.com Email:sales@ebeestock.com

© 2022 Ebeestock Enterprises All Rights Reserved

© 2022 Ebeestock Enterprises All Rights Reserved

www.ebeestock.com

REVISIONS			
REV.	DESCRIPTION	DATE	APPROVED
A	INITIAL RELEASE	05/16/19	S.ELLIS

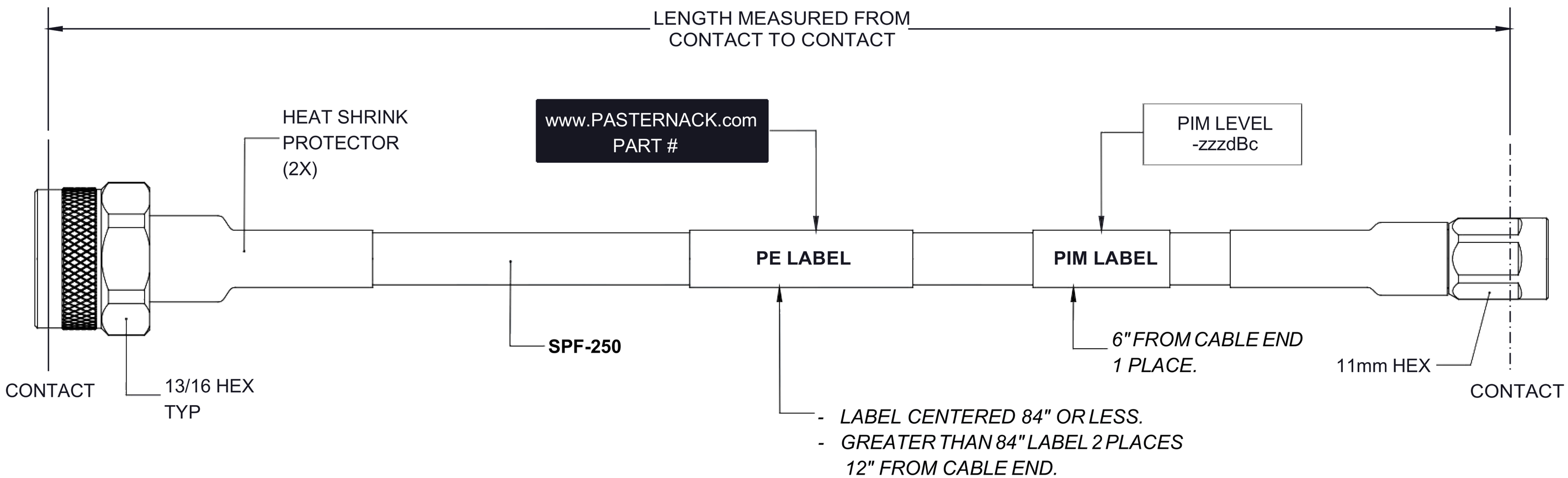

N MALE

XN SCREW
MALE

UNLESS OTHERWISE SPECIFIED
LEADING DIMENSIONS ARE INCHES
DIMENSIONS IN [ ] ARE MILLIMETERS

TOLERANCES:

.X=± .2	[5.08]	FRACTIONS
.XX=± .01	[.25]	± 1/32
.XXX=± .005	[.13]	ANGLES ± 1°

ALL DIMENSIONS SHOWN
ARE FOR REFERENCE ONLY.

THIRD ANGLE PROJECTION

PASTERNACK
an INFINITE brand
8th Floor, Building 1, Yongfu
Science and Technology
Center Industrial Park
P.O.Box 16759, Irvine, CA 92623.
Phone: 1.949.261.1920 | 1.866.727.8376
Fax: 1.949.261.7451
e-mail: sales@Ebeestock.com

THE INFORMATION AND
DESIGN IN THIS DOCUMENT
IS THE PROPERTY OF
Ebeestock CORPORATION. ALL
RIGHTS RESERVED.

SHEET 1 OF 1

SCALE N/A

SIZE	CAGE	DRAWN BY	PART NUMBER	REV
A	53919	K.DANG	ET3C6362	A

THESE COMMODITIES, TECHNOLOGY OR SOFTWARE WERE EXPORTED FROM THE UNITED STATES IN ACCORDANCE WITH THE EXPORT ADMINISTRATION REGULATIONS. DIVERSION CONTRARY TO U.S. LAW PROHIBITED.

T-Rev.B