N Male Right Angle to N Female Bulkhead Cable 12 Inch Length Using ET-RG213 Coax , LF Solder

RF Cable Assemblies Technical Data Sheet ET28971

Configuration

- Connector 1: N Male Right Angle
- Connector 2: N Female Bulkhead
- Cable Type: ET-RG213

Features

- Max Frequency 1 GHz
- 66% Phase Velocity
- PVC Jacket

Applications

- General Purpose
- Laboratory Use

Description

Ebeestock's ET28971 type N male right angle to type N female bulkhead 12 inch cable using ET-RG213 coax is part of our full line of RF components available for same-day shipping. Ebeestock's flexible RF cable assemblies are ideal for applications where tight bends and flexure are required. This Ebeestock type N to type N cable assembly has a male to female gender configuration with 50 ohm flexible ET-RG213 coax. The ET28971 type N male to type N female cable assembly operates to 1 GHz. The right angle type N interface on the ET-RG213 cable allows for easier connections in tight spaces. Our RF cable assembly with type N bulkhead interface allows designers to create external connections on their product enclosures, and can be used in a variety of other rack mount and panel mount applications.

Custom versions of most RF cable assemblies can be built and shipped same day. Custom cable assembly lengths can be obtained by specifying the desired length on the web site at time of order or by contacting a sales representative. Other available RF cable assembly value added services include connector orientation or clocking, heat shrink booting and custom labeling. RF testing can also be performed to document the electrical performance of your cable assembly.

Click the following link (or enter part number in "SEARCH" on website) to obtain additional part information including price, inventory and certifications: N Male Right Angle to N Female Bulkhead Cable 12 Inch Length Using ET-RG213 Coax , LF Solder ET28971

8th Floor, Building 1, Yongfu Science and Technology Center Industrial Park,
Nanzha District 5, Humen,523900, Dongguan, Guangdong, China.

Webstie:www.ebeestock.com Email:sales@ebeestock.com

© 2022 Ebeestock Enterprises All Rights Reserved

N Male Right Angle to N Female Bulkhead Cable 12 Inch Length
Using ET-RG213 Coax , LF Solder

RF Cable Assemblies Technical Data Sheet ET28971

Electrical Specifications

Description	Minimum	Typical	Maximum	Units
Frequency Range	DC		1,000	MHz
VSWR			1.4:1	
Velocity of Propagation		66		%
Capacitance		30.8 [101.05]		pF/ft [pF/m]
Operating Voltage (AC)			1,000	Vrms

Specifications by Frequency

Description	F1	F2	F3	F4	F5	Units
Frequency	100	250	500	1,000		MHz
Insertion Loss (Max.)	0.38	0.43	0.49	0.59		dB

Electrical Specification Notes:
The Insertion Loss data above is based on the performance specifications of the coax used in this assembly. Insertion Loss is estimated as 0.2 dB for the N Male connector and 0.1 dB for the N Female connector.

Mechanical Specifications

Cable Assembly

Length*	12 in [304.8 mm]
Diameter	0.825 in [20.96 mm]

Cable

Cable Type	ET-RG213
Impedance	50 Ohms
Inner Conductor Type	Stranded
Inner Conductor Material and Plating	Copper
Dielectric Type	PE
Number of Shields	1
Shield Layer 1	Copper Braid
Jacket Material	PVC, Black
Jacket Diameter	0.405 in [10.29 mm]
Repeated Minimum Bend Radius	1.6 in [40.64 mm]

Click the following link (or enter part number in “SEARCH” on website) to obtain additional part information including price, inventory and certifications: N Male Right Angle to N Female Bulkhead Cable 12 Inch Length Using ET-RG213 Coax , LF Solder ET28971

8th Floor, Building 1, Yongfu Science and Technology Center Industrial Park,
Nanzha District 5, Humen,523900, Dongguan, Guangdong, China.

Webstie:www.ebeestock.com Email:sales@ebeestock.com

© 2022 Ebeestock Enterprises All Rights Reserved

N Male Right Angle to N Female Bulkhead Cable 12 Inch Length
Using ET-RG213 Coax , LF Solder

RF Cable Assemblies Technical Data Sheet ET28971

Connectors

Description	Connector 1	Connector 2
Type	N Male Right Angle	N Female Bulkhead
Specification	MIL-STD-348A	MIL-STD-348A
Impedance	50 Ohms	50 Ohms
Mating Cycles	500	
Contact Material and Plating	Brass, Gold	Brass, Gold
Contact Plating Specification	30 µin minimum	30 µin minimum
Dielectric Type	PTFE	PTFE
Body Material and Plating	Brass, Nickel	Brass, Nickel
Body Plating Specification	100 µin minimum	
Coupling Nut Material and Plating	Brass, Nickel	

Environmental Specifications

Temperature

Operating Range -25 to +70 deg C

Compliance Certifications (see product page for current document)

Plotted and Other Data

Notes:

Click the following link (or enter part number in “SEARCH” on website) to obtain additional part information including price, inventory and certifications: N Male Right Angle to N Female Bulkhead Cable 12 Inch Length Using ET-RG213 Coax , LF Solder ET28971

8th Floor, Building 1, Yongfu Science and Technology Center Industrial Park,
Nanzha District 5, Humen,523900, Dongguan, Guangdong, China.

Webstie:www.ebeestock.com Email:sales@ebeestock.com

© 2022 Ebeestock Enterprises All Rights Reserved

N Male Right Angle to N Female Bulkhead Cable 12 Inch Length
Using ET-RG213 Coax , LF Solder

RF Cable Assemblies Technical Data Sheet ET28971

How to Order

Part Number Configuration: **ET3C6624LF - xx uu**

- **uu** — Unit of Measure:
  - cm = Centimeters
  - <blank> = Inches
- **xx** — Length
- **ET3C6624LF** — Base Number

Example: ET28971 = 12 inches long cable
ET3C6624LF-100cm = 100 cm long cable

N Male Right Angle to N Female Bulkhead Cable 12 Inch Length Using ET-RG213 Coax , LF Solder from Ebeestock Enterprises has same day shipment for domestic and International orders. Our RF, microwave and millimeter wave products maintain a 99.4% availability and are part of the broadest selection in the industry.

Click the following link (or enter part number in “SEARCH” on website) to obtain additional part information including price, inventory and certifications: N Male Right Angle to N Female Bulkhead Cable 12 Inch Length Using ET-RG213 Coax , LF Solder ET28971

URL: https://www.ebeestock.com/n-male-right-angle-to-n-female-bulkhead-cable-12-inch-length-using-rg213-coax-lf-solder-0028971

The information contained in this document is accurate to the best of our knowledge and representative of the part described herein. It may be necessary to make modifications to the part and/or the documentation of the part, in order to implement improvements. Ebeestock reserves the right to make such changes as required. Unless otherwise stated, all specifications are nominal. Ebeestock does not make any representation or warranty regarding the suitability of the part described herein for any particular purpose, and Ebeestock does not assume any liability arising out of the use of any part or documentation.

8th Floor, Building 1, Yongfu Science and Technology Center Industrial Park,
Nanzha District 5, Humen,523900, Dongguan, Guangdong, China.

Webstie:www.ebeestock.com Email:sales@ebeestock.com

© 2022 Ebeestock Enterprises All Rights Reserved

© 2022 Ebeestock Enterprises All Rights Reserved

www.ebeestock.com

REVISIONS			
REV.	DESCRIPTION	DATE	APPROVED
A	INITIAL RELEASE	8/25/2020	S.ELLIS

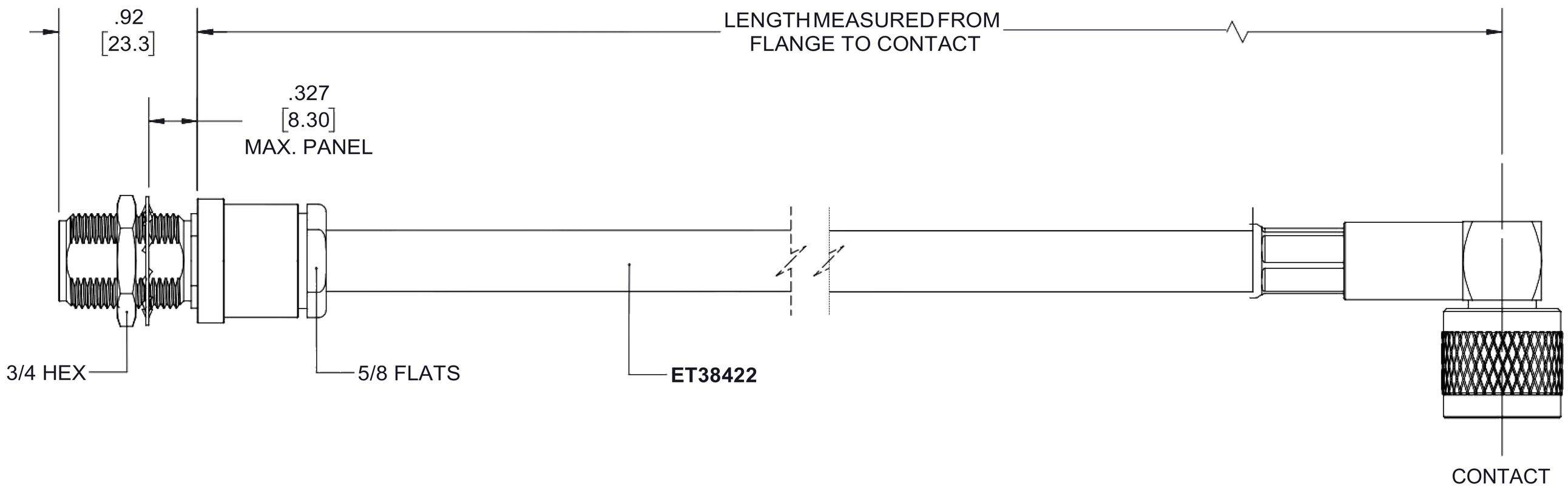

N FEMALE
BULKHEAD

N MALE
RA

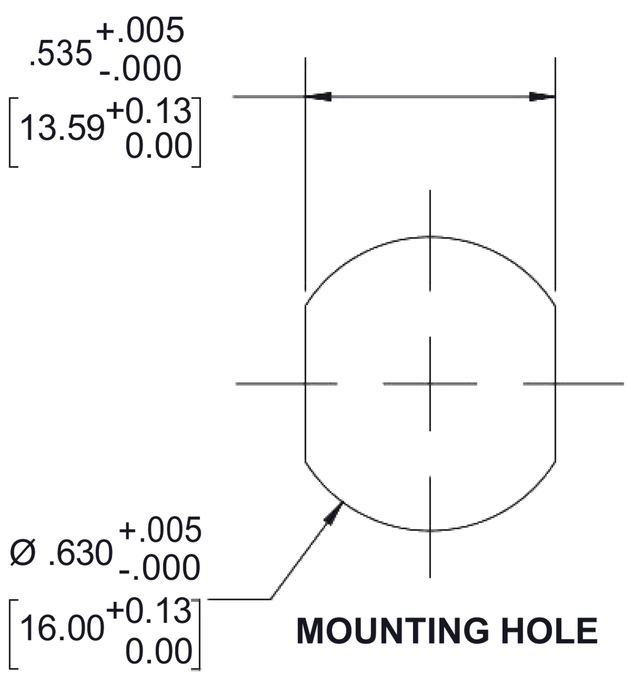

MOUNTING HOLE

UNLESS OTHERWISE SPECIFIED
LEADING DIMENSIONS ARE INCHES
DIMENSIONS IN [ ] ARE MILLIMETERS

TOLERANCES:

.X = ±.2	[5.08]	FRACTIONS
.XX = ± .02	[.51]	± 1/32
.XXX = ±.005	[.13]	ANGLES ± 1°

CABLE LENGTH (L) TOLERANCES:

L ≤ 12 [305] = +1 [25] / -0
12 [305] < L ≤ 60 [1524] = +2 [51] / -0
60 [1524] < L ≤ 120 [3048] = +4 [102] / -0
120 [3048] < L ≤ 300 [7620] = +6 [152] / -0
300 [7620] < L = +5%L / -0

ALL DIMENSIONS SHOWN
ARE FOR REFERENCE ONLY.

PASTERNACK®
an INFINITE brand
8th Floor, Building 1, Yongfu
Science and Technology Center
Industrial Park
P.O.Box 16759, Irvine, CA 92623.
Phone: 1.949.261.1920 | 1.866.727.8376
Fax: 1.949.261.7451
Website: E-mail:
sales@Ebeestock.com

THIRD-ANGLE PROJECTION

THE INFORMATION AND
DESIGN IN THIS DOCUMENT
IS THE PROPERTY OF
Ebeestock CORPORATION

ALL RIGHTS RESERVED.

SHEET 1 OF 1

SCALE N/A

SIZE	CAGE CODE	DRAWN BY	ITEM NO.	REV
A	53919	K.DANG	ET3C6624LF	A

THESE COMMODITIES, TECHNOLOGY OR SOFTWARE WERE EXPORTED FROM THE UNITED STATES IN ACCORDANCE
WITH THE EXPORT ADMINISTRATION REGULATIONS. DIVERSION CONTRARY TO U.S. LAW PROHIBITED.