Fire Rated N Male to N Female Bulkhead Low PIM Cable 36 Inch Length Using SPF-250 Coax Using Times Microwave Parts

RF Cable Assemblies Technical Data Sheet ET29000

Configuration

- Connector 1: N Male
- Connector 2: N Female Bulkhead
- Cable Type: SPF-250

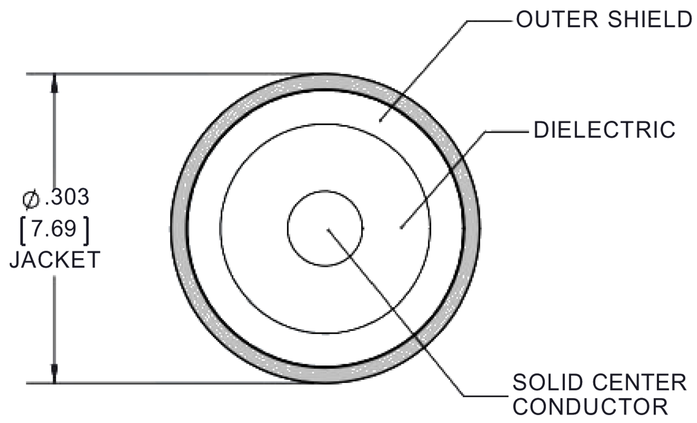

Features

- Max Frequency 5.8 GHz
- Low PIM: -160 dBc Max
- 83% Phase Velocity
- FRPE Jacket
- 100% Tested with PIM Test Results Marked on Cable
- Lightweight and Extremely Flexible
- Low Loss with Excellent VSWR
- IP67 (when mated)
- Using Times Microwave Components

Applications

- General Purpose
- Laboratory Use
- Low PIM Applications
- CMR Riser Rated Applications
- Distributed Antenna Systems (DAS)
- Multi-Carrier Communication Systems
- PIM Testing

Description

Ebeestock's ET29000 type N male to type N female bulkhead 36 inch cable using SPF-250 coax is part of our full line of RF components available for same-day shipping. Ebeestock's corrugated RF cable assemblies are ideal for applications where durability and high power are needed. This Ebeestock type N to type N cable assembly has a male to female gender configuration with 50 ohm corrugated SPF-250 coax. The ET29000 type N male to type N female cable assembly oper- ates to 5.8 GHz. Our low PIM design also offers excellent passive intermodulation performance with PIM levels better than -160 dBc. Our RF cable assembly with type N bulkhead interface allows designers to create external connections on their product enclosures, and can be used in a variety of other rack mount and panel mount applications.

Custom versions of most RF cable assemblies can be built and shipped same day. Custom cable assembly lengths can be obtained by specifying the desired length on the web site at time of order or by contacting a sales representative. Other avail- able RF cable assembly value added services include connector orientation or clocking, heat shrink booting and custom label- ing. RF testing can also be performed to document the electrical performance of your cable assembly.

Electrical Specifications

Description	Minimum	Typical	Maximum	Units
Frequency Range	DC		5.8	GHz
VSWR			1.4:1	
Velocity of Propagation		83		%
Passive Intermodulation			-160	dBc

Click the following link (or enter part number in "SEARCH" on website) to obtain additional part information includ- ing price, inventory and certifications: Fire Rated N Male to N Female Bulkhead Low PIM Cable 36 Inch Length Using SPF-250 Coax Using Times Microwave Parts ET29000

8th Floor, Building 1, Yongfu Science and Technology Center Industrial Park,
Nanzha District 5, Humen,523900, Dongguan, Guangdong, China.

Webstie:www.ebeestock.com Email:sales@ebeestock.com

© 2022 Ebeestock Enterprises All Rights Reserved

Fire Rated N Male to N Female Bulkhead Low PIM Cable 36 Inch Length Using SPF-250 Coax Using Times Microwave Parts

RF Cable Assemblies Technical Data Sheet

ET29000

Capacitance	24 [78.74]	pF/ft [pF/m]
Inductance	0.054 [0.18]	uH/ft [uH/m]

Specifications by Frequency

Description	F1	F2	F3	F4	F5	Units
Frequency	0.25	0.5	1	2.5	5.8	GHz
Insertion Loss (Typ.)	0.19	0.28	0.39	0.63	0.99	dB

Electrical Specification Notes:
The Insertion Loss data above is based on the performance specifications of the coax and connectors used in this assembly. The Insertion Loss includes an estimated insertion loss of 0.1*SQRT(FGHz) dB per connector.

Mechanical Specifications

Cable Assembly

Length*	36 in [914.4 mm]
Diameter	0 in [0 mm]

Cable

Cable Type	SPF-250
Impedance	50 Ohms
Inner Conductor Type	Solid
Inner Conductor Material and Plating	Copper Clad Aluminum
Dielectric Type	Foam PE
Number of Shields	1
Outer Conductor Material and Plating	Copper
Jacket Material	FRPE, Black
Jacket Diameter	0.303 in [7.7 mm]
One Time Minimum Bend Radius	1.25 in [31.75 mm]
Bending Moment	0.5 lbs-ft [0.68 N-m]

Click the following link (or enter part number in “SEARCH” on website) to obtain additional part information including price, inventory and certifications: Fire Rated N Male to N Female Bulkhead Low PIM Cable 36 Inch Length Using SPF-250 Coax Using Times Microwave Parts ET29000

8th Floor, Building 1, Yongfu Science and Technology Center Industrial Park,
Nanzha District 5, Humen,523900, Dongguan, Guangdong, China.

Webstie:www.ebeestock.com Email:sales@ebeestock.com

© 2022 Ebeestock Enterprises All Rights Reserved

Fire Rated N Male to N Female Bulkhead Low PIM Cable 36 Inch Length Using SPF-250 Coax Using Times Microwave Parts

RF Cable Assemblies Technical Data Sheet ET29000

Connectors

Description	Connector 1	Connector 2
Type	N Male	N Female Bulkhead
Impedance	50 Ohms	50 Ohms
Contact Material and Plating	Phosphor Bronze, Silver	Phosphor Bronze, Silver
Contact Plating Specification	196 µin	196 µin
Dielectric Type	PTFE	PTFE
Outer Conductor Material and Plating		Brass, Tri-Metal
Outer Conductor Plating Specification		118 µin
Body Material and Plating	Brass, Tri-Metal	Brass, Tri-Metal
Body Plating Specification	118 µin	118 µin
Coupling Nut Material and Plating	Brass, Tri-Metal	
Coupling Nut Plating Specification	118 µin	
Torque	7.08 in-lbs [0.8 Nm]	6 in-lbs [0.68 Nm]

Environmental Specifications

Temperature

Operating Range -40 to +85 deg C

Compliance Certifications (see product page for current document)

Plotted and Other Data

Notes:

Click the following link (or enter part number in “SEARCH” on website) to obtain additional part information including price, inventory and certifications: Fire Rated N Male to N Female Bulkhead Low PIM Cable 36 Inch Length Using SPF-250 Coax Using Times Microwave Parts ET29000

8th Floor, Building 1, Yongfu Science and Technology Center Industrial Park,
Nanzha District 5, Humen,523900, Dongguan, Guangdong, China.

Webstie:www.ebeestock.com Email:sales@ebeestock.com

© 2022 Ebeestock Enterprises All Rights Reserved

Fire Rated N Male to N Female Bulkhead Low PIM Cable 36 Inch Length Using SPF-250 Coax Using Times Microwave Parts

RF Cable Assemblies Technical Data Sheet ET29000

How to Order

Part Number Configuration: **ET3C8492 - xx uu**

- **uu** — Unit of Measure:
  - cm = Centimeters
  - <blank> = Inches
- **xx** — Length
- **ET3C8492** — Base Number

Example: ET3C8492-12 = 12 inches long cable
ET3C8492-100cm = 100 cm long cable

Fire Rated N Male to N Female Bulkhead Low PIM Cable 36 Inch Length Using SPF-250 Coax Using Times Microwave Parts from Ebeestock Enterprises has same day shipment for domestic and International orders. Our RF, microwave and millimeter wave products maintain a 99.4% availability and are part of the broadest selection in the industry.

Click the following link (or enter part number in “SEARCH” on website) to obtain additional part information including price, inventory and certifications: Fire Rated N Male to N Female Bulkhead Low PIM Cable 36 Inch Length Using SPF-250 Coax Using Times Microwave Parts ET29000

URL: https://www.ebeestock.com/fire-rated-n-male-to-n-female-bulkhead-low-pim-cable-12-inch-length-using-spf-250-coax-using-times-microwave-parts-0028998

The information contained in this document is accurate to the best of our knowledge and representative of the part described herein. It may be necessary to make modifications to the part and/or the documentation of the part, in order to implement improvements. Ebeestock reserves the right to make such changes as required. Unless otherwise stated, all specifications are nominal. Ebeestock does not make any representation or warranty regarding the suitability of the part described herein for any particular purpose, and Ebeestock does not assume any liability arising out of the use of any part or documentation.

8th Floor, Building 1, Yongfu Science and Technology Center Industrial Park,
Nanzha District 5, Humen,523900, Dongguan, Guangdong, China.

Webstie:www.ebeestock.com Email:sales@ebeestock.com

© 2022 Ebeestock Enterprises All Rights Reserved

© 2022 Ebeestock Enterprises All Rights Reserved

www.ebeestock.com

REVISIONS			
REV.	DESCRIPTION	DATE	APPROVED
A	INITIAL RELEASE	9/21/2021	A. GANWANI

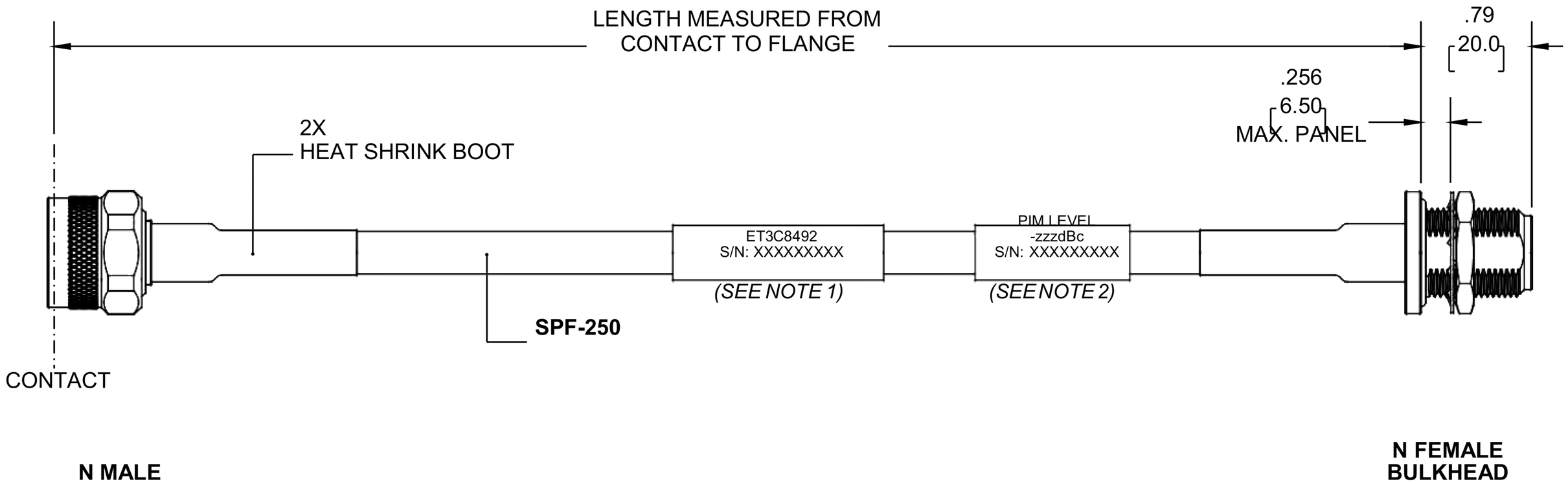

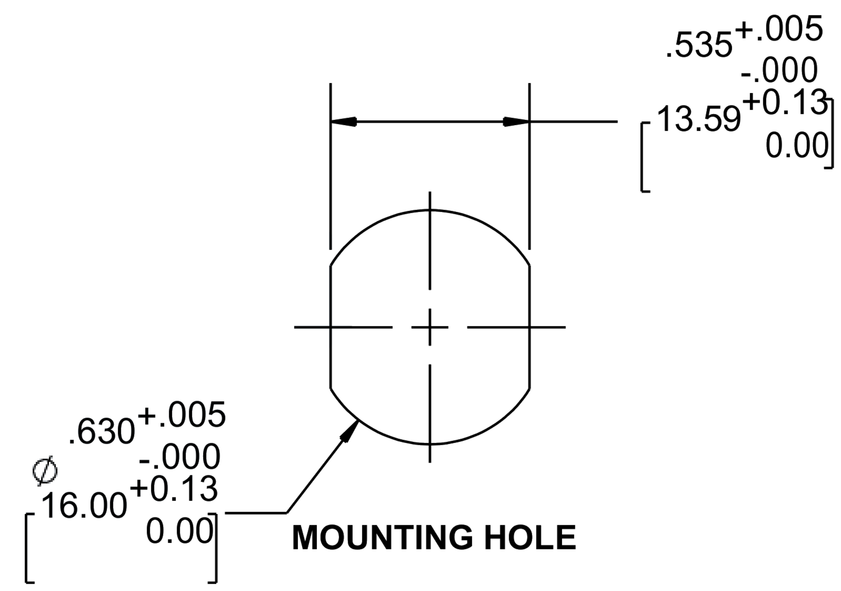

NOTES:

1. CABLES 84" AND UNDER HAVE 1 LABEL CENTERED. CABLES OVER 84" HAVE 2 LABELS, ONE AT EACH END 12.0" FROM THE END OF THE CONNECTOR.
2. 6" FROM CABLE END 1 PLACE FOR ALL LENGTHS OF CABLE.

THESE COMMODITIES, TECHNOLOGY OR SOFTWARE WERE EXPORTED FROM THE UNITED STATES IN ACCORDANCE WITH THE EXPORT ADMINISTRATION REGULATIONS. DIVERSION CONTRARY TO U.S. LAW PROHIBITED.

UNLESS OTHERWISE SPECIFIED
LEADING DIMENSIONS ARE INCHES
DIMENSIONS IN [ ] ARE MILLIMETERS

TOLERANCES:

.X = ±.2 [5.08]
.XX = ± .02 [.51]
.XXX = ±.005 [.13]

FRACTIONS ± 1/32
ANGLES ± 1°

CABLE LENGTH (L) TOLERANCES:

L ≤ 12 [305] = +1 [25] / -0
12 [305] < L ≤ 60 [1524] = +2 [51] / -0
60 [1524] < L ≤ 120 [3048] = +4 [102] / -0
120 [3048] < L ≤ 300 [7620] = +6 [152] / -0
300 [7620] < L = +5%L / -0

ALL DIMENSIONS SHOWN ARE FOR REFERENCE ONLY.

ebeestock
Ebeestock.com
8th Floor, Building 1, Yongfu Science and Technology Center Industrial Park,
Nanzha District 5, Humen,523900, Dongguan, Guangdong, China.
Webstie: www.ebeestock.com **Email:** sales@ebeestock.com

THIRD-ANGLE PROJECTION

THE INFORMATION AND DESIGN IN THIS DOCUMENT IS THE PROPERTY OF Ebeestock CORPORATION ALL RIGHTS RESERVED.

SHEET	OF
1	1

SCALE N/A

SIZE	CAGE CODE	DRAWN BY	ITEM NO.	REV
A	53919	K.DANG	ET3C8492	A

T-Rev.D