N Female Bulkhead to UMCX 2.5 Plug Cable 6 Inch Length Using 1.13mm Coax, RoHS

# TECHNICAL DATA SHEET ET29008

Ebeestock's UMCX 2.5 series ultra-miniature coaxial cable assemblies (also called 2.5mm UMCX) have a mated connection height of only 2.5mm. They are constructed using a flexible micro-coax cable and are compatible with ultra-miniature products from companies such as Hirose, IPEX, and other UMCX connector and cable manufactures. Our UMCX 2.5 plug connectors are comparable in design to the Hirose U.FL series of connectors and the IPEX MHF series connectors. Ebeestock also provides three additional connector options for our between-series 0.81mm micro-coax jumper cables including UMCX 2.5, WMCX 1.6 and HMCX32 1.2 low profile connectors with differing form factors and mated heights.

Our UMCX 2.5 between series cables can be ordered with Female Bulkhead versions of SMA, Reverse Polarity SMA and Type N connectors as well as an SMA Male option. These cables provide a convenient connector interface for applications that require and RF signal to be routed to an external RF component such as an antenna or to provide a test point for the RF printed circuit board. Other coax cable options include 1.13mm, 1.37mm, ET-RG178, and ET-ET-RG178-DS (double shielded). These U.FL and MHF compatible UMCX 2.5 cable assemblies are available from stock in standard lengths, and custom lengths are available upon request. Standard length UMCX 2.5 cables ship the same day they are ordered.

## Features

- 1.2mm, 1.6mm, 2.1mm and 2.5mm mated assembly height's
- Operate from DC to 6GHz
- 100% RF and Continuity tested
- Compatible with Hirose U.FL and IPEX MHF products
- Available in 0.81mm, 1.13mm, 1.37mm, ET-RG178 and ET-ET-RG178-DS shielded coax
- Small foot print with easy snap on/off mating

## Applications

- Wireless LAN, Mini PCI
- Mobile Antenna/GPS/Radio Systems
- PDA/PCS/Cellular Handset applications
- Wireless Communications systems (LAN,GSM,PCS, WCDMA, UMTS)

## Configuration

| | |
|---|---|
| Connector 1 | N Female Bulkhead |
| Connector 2 | UMCX 2.5 Plug |
| Cable Type | 1.13mm |

## Electrical Specifications

| | |
|---|---|
| Frequency Range | DC to 3 GHz |
| Impedance | 50 Ohms |
| Max VSWR | 1.35:1 |

### Performance by Frequency

**Frequency 1**

| | |
|---|---|
| Frequency | 250 MHz |
| VSWR | 1.35:1 |
| Return Loss | 16.54 dB |
| Insertion Loss | 0.5 dB |

**Frequency 2**

| | |
|---|---|
| Frequency | 500 MHz |
| VSWR | 1.35:1 |

Click the following link (or enter part number in "SEARCH" on website) to obtain additional part information including price, inventory and certifications: N Female Bulkhead to UMCX 2.5 Plug Cable 6 Inch Length Using 1.13mm Coax, RoHS ET29008

8th Floor, Building 1, Yongfu Science and Technology Center Industrial Park,
Nanzha District 5, Humen,523900, Dongguan, Guangdong, China.

Webstie:www.ebeestock.com Email:sales@ebeestock.com

© 2022 Ebeestock Enterprises All Rights Reserved

N Female Bulkhead to UMCX 2.5 Plug Cable 6 Inch Length Using 1.13mm Coax, RoHS

# TECHNICAL DATA SHEET ET29008

| | |
|---|---|
| Return Loss | 16.54 dB |
| Insertion Loss | 0.7 dB |
| **Frequency 3** | |
| Frequency | 1000 MHz |
| VSWR | 1.35:1 |
| Return Loss | 16.54 dB |
| Insertion Loss | 0.97 dB |
| **Frequency 4** | |
| Frequency | 2.5 GHz |
| VSWR | 1.35:1 |
| Return Loss | 16.54 dB |
| Insertion Loss | 1.44 dB |
| **Frequency 5** | |
| Frequency | 3 GHz |
| VSWR | 1.35:1 |
| Return Loss | 16.54 dB |
| Insertion Loss | 2.07 dB |

## Mechanical Specifications

| | |
|---|---|
| **Temperature** | |
| Temperature Operating Range | -55 to +125 deg C |
| **Size** | |
| Length | 6 in [152.4 mm] |
| **Cable** | |
| Cable Type | 1.13mm |
| Inner Conductor Type | Stranded |
| Cable Inner Conductor | Copper, Silver |
| No of Shields | 1 |
| Cable Outer Conductor 1 | Tinned Copper |
| Dielectric Type | FEP |
| Jacket Material | FEP |
| Jacket Diameter | 0.044 in [1.12 mm] |
| **Connector 1** | |
| Type | N Female Bulkhead |
| Configuration | Straight |
| Mount Method | Bulkhead |
| Inner Conductor Material and Plating | Phosphor Bronze, Gold |
| Body Material and Plating | Brass, Nickel |

Click the following link (or enter part number in “SEARCH” on website) to obtain additional part information including price, inventory and certifications: N Female Bulkhead to UMCX 2.5 Plug Cable 6 Inch Length Using 1.13mm Coax, RoHS ET29008

8th Floor, Building 1, Yongfu Science and Technology Center Industrial Park,
Nanzha District 5, Humen,523900, Dongguan, Guangdong, China.

Webstie:www.ebeestock.com Email:sales@ebeestock.com

© 2022 Ebeestock Enterprises All Rights Reserved

N Female Bulkhead to UMCX 2.5 Plug Cable 6 Inch Length Using 1.13mm Coax, RoHS

# TECHNICAL DATA SHEET ET29008

**Connector 2**

| | |
|---|---|
| Type | UMCX 2.5 Plug |
| Configuration | Straight |

**Compliance Certifications** (visit for current document)

| | |
|---|---|
| RoHS Compliant | Yes |
| REACH Compliant | 12/19/2011 |

**Plotted and Other Data**

Notes:

- Values at +25 °C, sea level

**How to Order**

Part Number Configuration: **ET3CA1009 - xx uu**

- **uu** — Unit of Measure:
  - cm = Centimeters
  - <blank> = Inches
- **xx** — Length
- **ET3CA1009** — Base Number

Example: ET3CA1009-12 = 12 inches long cable
ET3CA1009-100cm = 100 cm long cable

N Female Bulkhead to UMCX 2.5 Plug Cable 6 Inch Length Using 1.13mm Coax, RoHS from Ebeestock Enterprises has same day shipment for domestic and International orders. Our RF, microwave and millimeter wave products maintain a 99% availability and are part of the broadest selection in the industry.

Click the following link (or enter part number in “SEARCH” on website) to obtain additional part information including price, inventory and certifications: N Female Bulkhead to UMCX 2.5 Plug Cable 6 Inch Length Using 1.13mm Coax, RoHS ET29008

**URL:** https://www.ebeestock.com/n-female-bulkhead-to-umcx-2-5-plug-cable-6-inch-length-using-1-13mm-coax-rohs-0029008

The information contained in this document is accurate to the best of our knowledge and representative of the part described herein. It may be necessary to make modifications to the part and/or the documentation of the part, in order to implement improvements. Ebeestock reserves the right to make such changes as required. Unless otherwise stated, all specifications are nominal. Ebeestock does not make any representation or warranty regarding the suitability of the part described herein for any particular purpose, and Ebeestock does not assume any liability arising out of the use of any part or documentation.

8th Floor, Building 1, Yongfu Science and Technology Center Industrial Park,
Nanzha District 5, Humen,523900, Dongguan, Guangdong, China.

Webstie:www.ebeestock.com Email:sales@ebeestock.com

© 2022 Ebeestock Enterprises All Rights Reserved

# ET29008 CAD Drawing

N Female Bulkhead to UMCX 2.5 Plug Cable 6 Inch Length Using 1.13mm Coax, RoHS

N Female Bulkhead to UMCX 2.5 Plug Cable 6 Inch Length Using

1.13mm Coax, RoHS

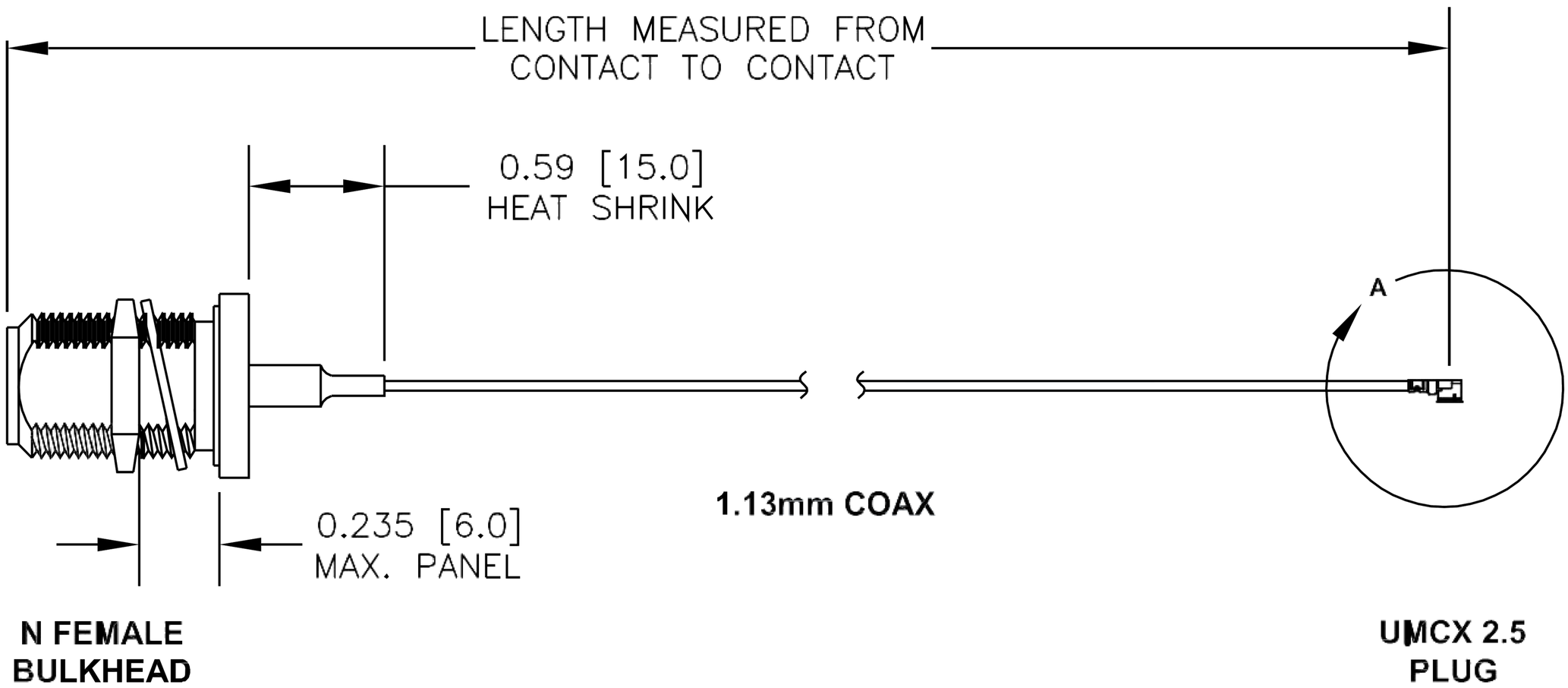


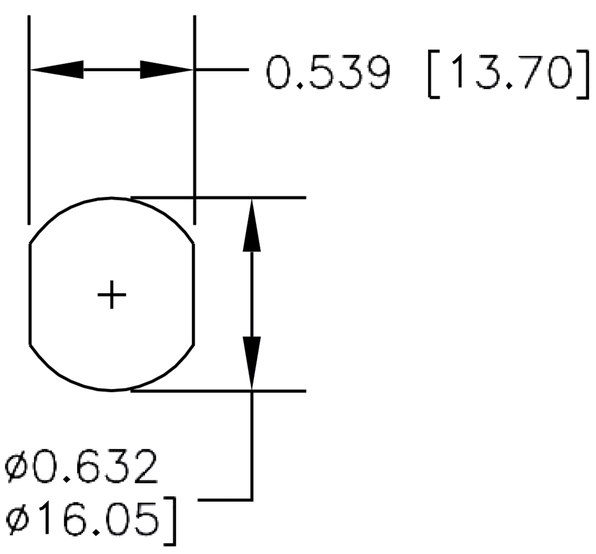


MOUNTING HOLE FOR
N FEMALE
BULKHEAD
CONNECTOR

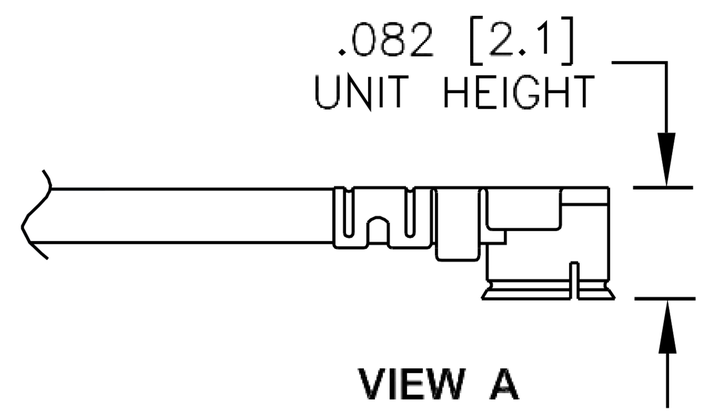


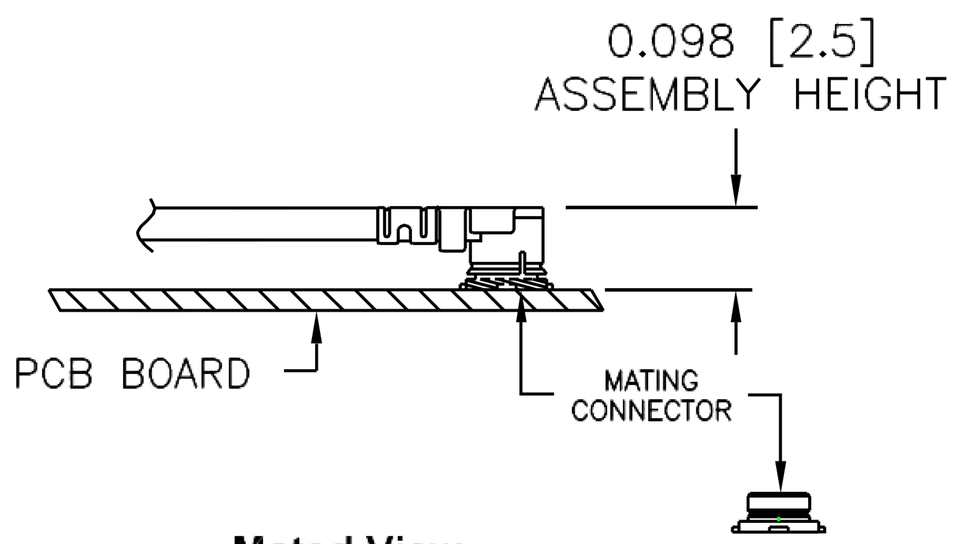


Mated View
[REF]

UMCX connectors are similar to U.FL*
*U.FL is a Registered Trademark of
Hirose Electronic Group


PASTERNACK
THE ENGINEER'S RF SOURCE
Pasternack Enterprises, Inc.
P.O. Box 16759 | Irvine | CA | 92623
8th Floor, Building 1, Yongfu Science and Technology Center Industrial Park,
Nanzha District 5, Humen,523900, Dongguan, Guangdong, China.
:k.com
Webstie:www.ebeestock.com Email:sales@ebeestock.com


NOTES:
1. UNLESS OTHERWISE SPECIFIED ALL DIMENSIONS ARE NOMINAL.
2. ALL SPECIFICATIONS ARE SUBJECT TO CHANGE WITHOUT NOTICE AT ANY TIME.
3. DIMENSIONS ARE IN INCHES [mm].
4. LENGTH TOLERANCE IS ± 1.5% OR 3/8", WHICHEVER IS GREATER.

| DWG TITLE | FSCM NO. 53919 | | | |
|---|---|---|---|---|
| PE3CA1009 | | | | |
| CAD FILE 031215 | SCALE N/A | SIZE A | 150 | |

© 2022 Ebeestock Enterprises All Rights Reserved