N Female Bulkhead to N Male Cable 12 Inch Length Using ET-141FLEX Coax, RoHS

RF Cable Assemblies Technical Data Sheet ET29022

Configuration

- Connector 1: N Female Bulkhead
- Connector 2: N Male
- Cable Type: ET-141FLEX

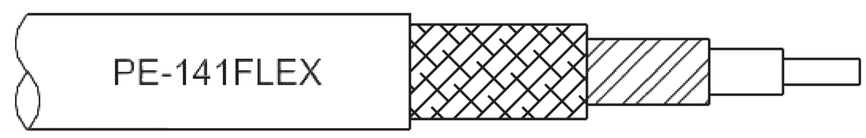

Features

- Design operates to 18 GHz
- Shielding effectivity > 90dB
- One time minimum bend radius: 0.4 inch
- Typical N Type VSWR 1.31:1 to 18 GHz

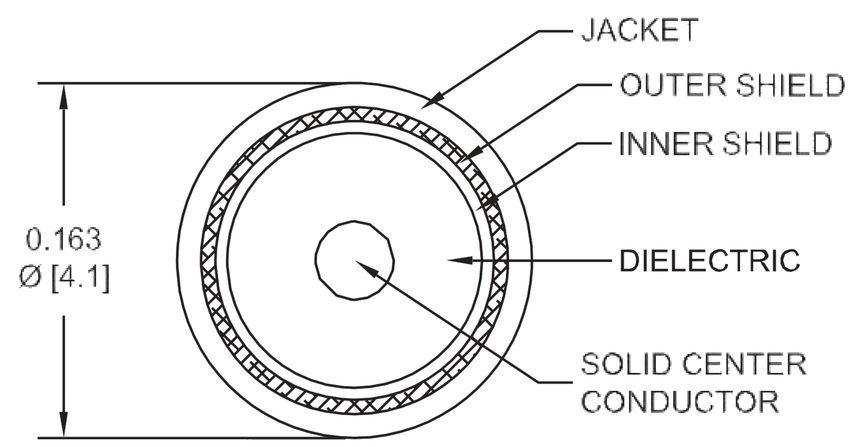

Applications

- High Performance RF equipment interconnect
- Flexible in cabinet or in the rack requirements
- Inside the box RF routing
- General purpose lighter duty lab use

Description

These new high performance flexible cables are made using our ET-141FLEX coax and our new low profile connectors. The high performance flexible design is well suited for connecting RF devices in rack-mount systems, inside RF equipment and for general lab hookup where a more expensive test cable is not required. These cables are similar to the ET30X series which have retractable coupling nuts and thick wall SMA connectors. The heavier duty ET35X test series cables have similar performance, but include a heavy duty strain relief mechanism and extra booting material as well as a thick wall SMA connector to increase the ruggedness of the ET35X cables for use in more demanding test environments.

ET-141FLEX is a flexible cable alternate to Semi Rigid coax and has a solid PTFE resulting in a 69.5% phase velocity. The smooth wall formed by the Braid over Spiral Ribbon design allows for a flexible cable that has similar performance to a solid wall 141 Semi Rigid (ET-RG402) cable.

Electrical Specifications

Description	Minimum	Typical	Maximum	Units
Frequency Range	DC		18	GHz
VSWR			1.4:1	
Return Loss	-15.56			dB
Velocity of Propagation		69.5		%
RF Shielding	90			dB
Group Delay		1.44 [4.72]		ns/ft [ns/m]
Capacitance		29.4 [96.46]		pF/ft [pF/m]

Click the following link (or enter part number in “SEARCH” on website) to obtain additional part information including price, inventory and certifications: N Female Bulkhead to N Male Cable 12 Inch Length Using ET-141FLEX Coax, RoHS ET29022

8th Floor, Building 1, Yongfu Science and Technology Center Industrial Park,
Nanzha District 5, Humen,523900, Dongguan, Guangdong, China.

Webstie:www.ebeestock.com Email:sales@ebeestock.com

© 2022 Ebeestock Enterprises All Rights Reserved

N Female Bulkhead to N Male Cable 12 Inch Length Using ET-14 1FLEX Coax, RoHS

RF Cable Assemblies Technical Data Sheet ET29022

Operating Voltage (AC)	335	Vrms

Specifications by Frequency

Description	F1	F2	F3	F4	F5	Units
Frequency	3	6	12	18		GHz
Insertion Loss (Max.)	0.45	0.65	0.95	1.19		dB
VSWR (Max.)	1.18:1	1.25:1	1.3:1	1.4:1		
Power Handling (Max.)	215	150	105	88		Watts

Mechanical Specifications

Cable Assembly

Length	12 in [304.8 mm]
Weight	0.19 lbs [86.18 g]

Cable

Cable Type	ET-141FLEX
Impedance	50 Ohms
Inner Conductor Type	Solid
Inner Conductor Material and Plating	Copper Clad Steel, Silver
Dielectric Type	PTFE
Number of Shields	2
Shield Layer 1	Silver Plated Copper Tape
Shield Layer 2	Silver Plated Copper Braid
Jacket Material	FEP
Jacket Diameter	0.163 in [4.14 mm]
One Time Minimum Bend Radius	0.39 in [9.91 mm]
Repeated Minimum Bend Radius	1.57 in [39.88 mm]

Click the following link (or enter part number in “SEARCH” on website) to obtain additional part information including price, inventory and certifications: N Female Bulkhead to N Male Cable 12 Inch Length Using ET-141FLEX Coax, RoHS ET29022

8th Floor, Building 1, Yongfu Science and Technology Center Industrial Park,
Nanzha District 5, Humen,523900, Dongguan, Guangdong, China.

Webstie:www.ebeestock.com Email:sales@ebeestock.com

© 2022 Ebeestock Enterprises All Rights Reserved

N Female Bulkhead to N Male Cable 12 Inch Length Using ET-14

1FLEX Coax, RoHS

RF Cable Assemblies Technical Data Sheet ET29022

Connectors

Description	Connector 1	Connector 2
Type	N Female Bulkhead	N Male
Impedance	50 Ohms	50 Ohms
Mating Cycles	500	500
Contact Material and Plating	Beryllium Copper, Gold	Brass, Gold
Dielectric Type	PTFE	PTFE
Coupling Nut Material and Plating	Brass, Nickel	Brass, Nickel
Hex Size		3/4 Inch
Body Material and Plating	Brass, Nickel	Brass, Nickel

Environmental Specifications

Temperature

Operating Range -40 to +150 deg C

Compliance Certifications (visit for current document)

RoHS Compliant Yes

REACH Compliant 12/17/2015

Plotted and Other Data

Notes:

- Values at 25°C, sea level.

Click the following link (or enter part number in “SEARCH” on website) to obtain additional part information including price, inventory and certifications: N Female Bulkhead to N Male Cable 12 Inch Length Using ET-141FLEX Coax, RoHS ET29022

8th Floor, Building 1, Yongfu Science and Technology Center Industrial Park,
Nanzha District 5, Humen,523900, Dongguan, Guangdong, China.

Webstie:www.ebeestock.com Email:sales@ebeestock.com

© 2022 Ebeestock Enterprises All Rights Reserved

N Female Bulkhead to N Male Cable 12 Inch Length Using ET-14

1FLEX Coax, RoHS

RF Cable Assemblies Technical Data Sheet ET29022

Typical Performance Data

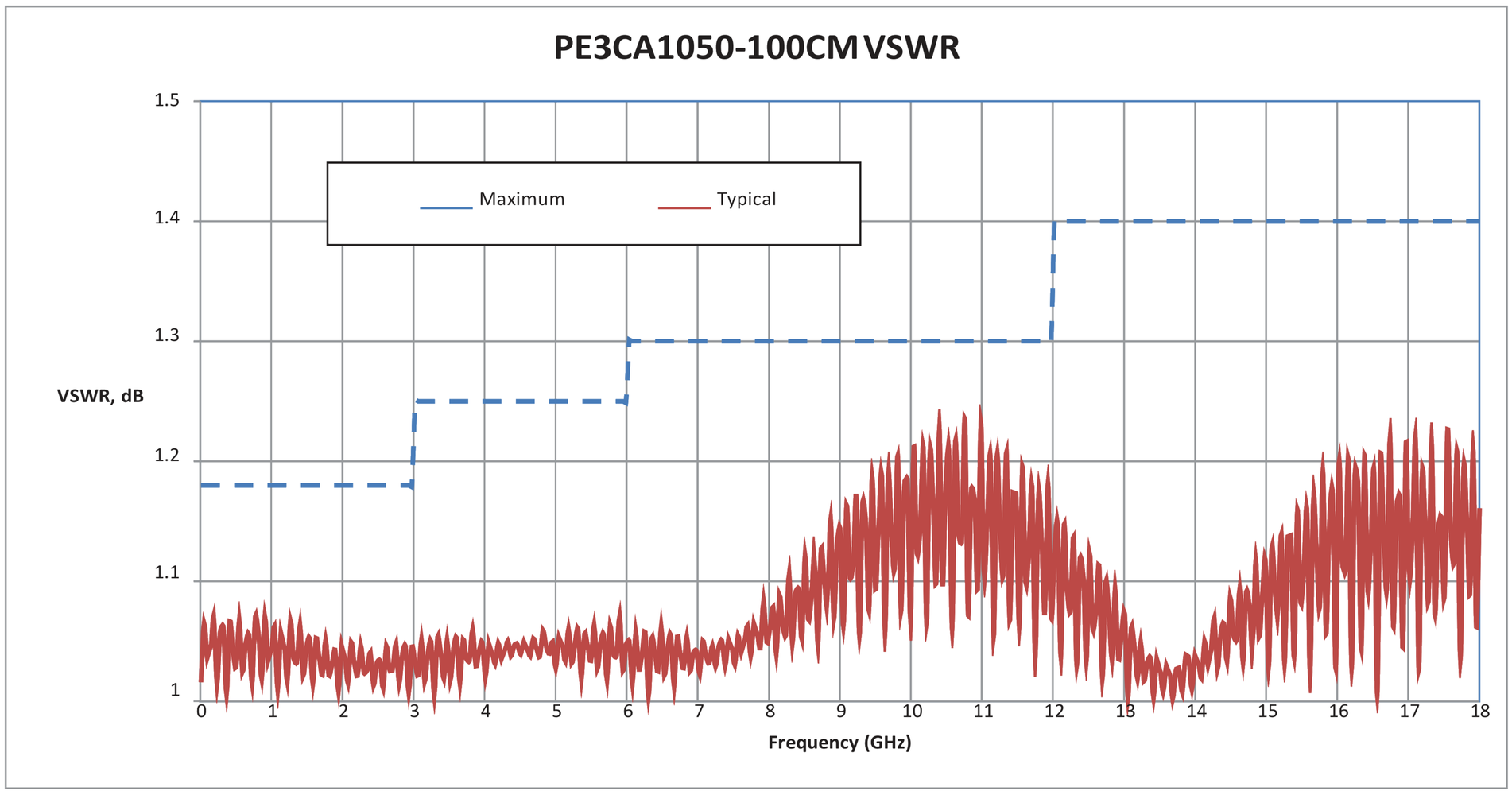

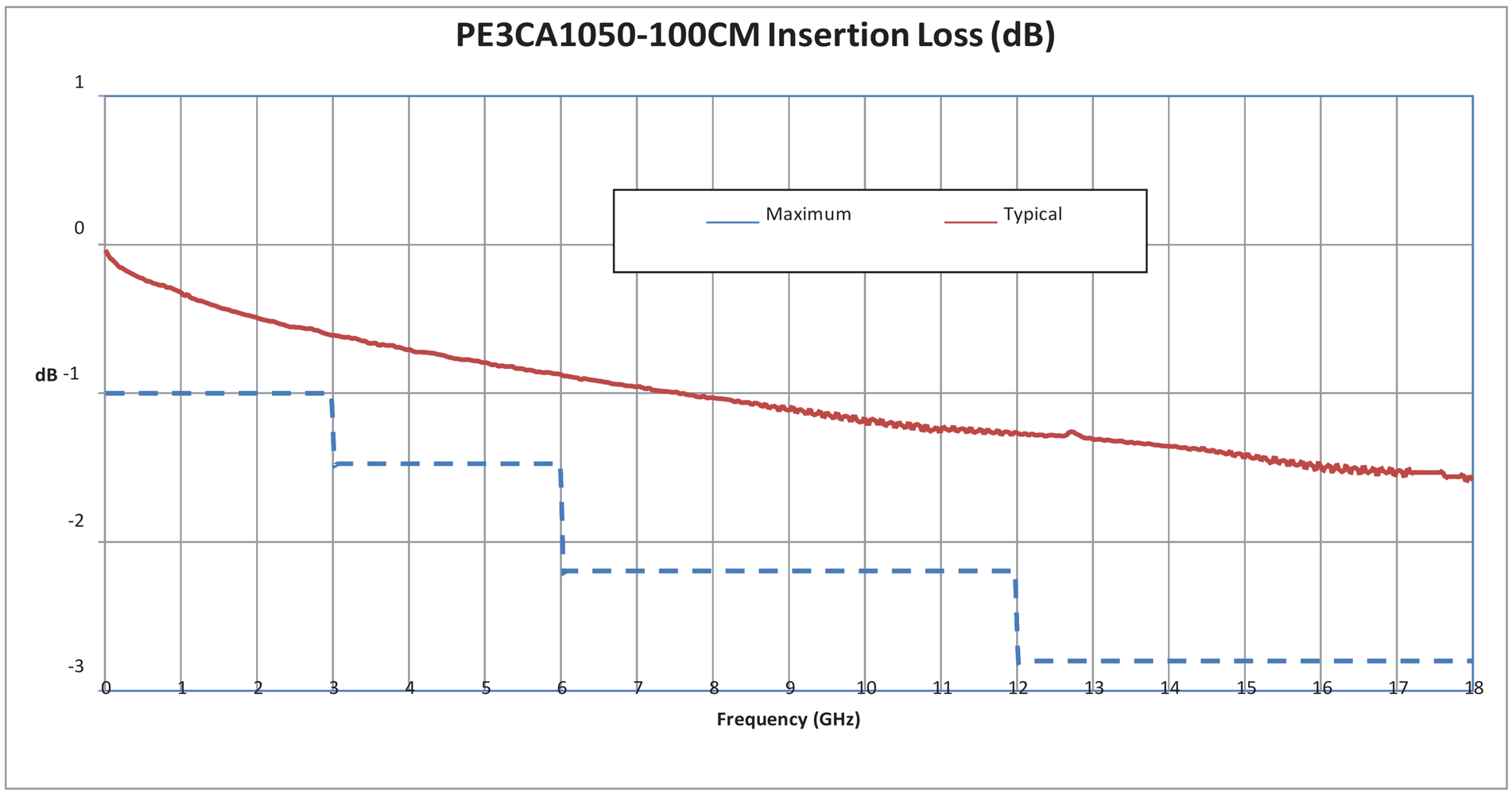

Click the following link (or enter part number in “SEARCH” on website) to obtain additional part information including price, inventory and certifications: N Female Bulkhead to N Male Cable 12 Inch Length Using ET-141FLEX Coax, RoHS ET29022

8th Floor, Building 1, Yongfu Science and Technology Center Industrial Park,
Nanzha District 5, Humen,523900, Dongguan, Guangdong, China.

Webstie:www.ebeestock.com Email:sales@ebeestock.com

© 2022 Ebeestock Enterprises All Rights Reserved

N Female Bulkhead to N Male Cable 12 Inch Length Using ET-14

1FLEX Coax, RoHS

RF Cable Assemblies Technical Data Sheet ET29022

How to Order

Part Number Configuration: **ET3CA1050 - xx uu**

- ET3CA1050 — Base Number
- xx — Length
- uu — Unit of Measure:
  - cm = Centimeters
  - <blank> = Inches

Example: ET29022 = 12 inches long cable
ET3CA1050-100cm = 100 cm long cable

N Female Bulkhead to N Male Cable 12 Inch Length Using ET-141FLEX Coax, RoHS from Ebeestock Enterprises has same day shipment for domestic and International orders. Our RF, microwave and millimeter wave products maintain a 99% availability and are part of the broadest selection in the industry.

Click the following link (or enter part number in “SEARCH” on website) to obtain additional part information including price, inventory and certifications: N Female Bulkhead to N Male Cable 12 Inch Length Using ET-141FLEX Coax, RoHS ET29022

URL: https://www.ebeestock.com/n-female-bulkhead-to-n-male-cable-12-inch-length-using-pe-141flex-coax-rohs-0029022

The information contained in this document is accurate to the best of our knowledge and representative of the part described herein. It may be necessary to make modifications to the part and/or the documentation of the part, in order to implement improvements. Ebeestock reserves the right to make such changes as required. Unless otherwise stated, all specifications are nominal. Ebeestock does not make any representation or warranty regarding the suitability of the part described herein for any particular purpose, and Ebeestock does not assume any liability arising out of the use of any part or documentation.

8th Floor, Building 1, Yongfu Science and Technology Center Industrial Park,
Nanzha District 5, Humen,523900, Dongguan, Guangdong, China.

Webstie:www.ebeestock.com Email:sales@ebeestock.com

© 2022 Ebeestock Enterprises All Rights Reserved

ET29022 CAD Drawing

N Female Bulkhead to N Male Cable 12 Inch Length Using ET-141FLEX Coax, RoHS

N Female Bulkhead to N Male Cable 12 Inch Length Using ET-14

1FLEX Coax, RoHS

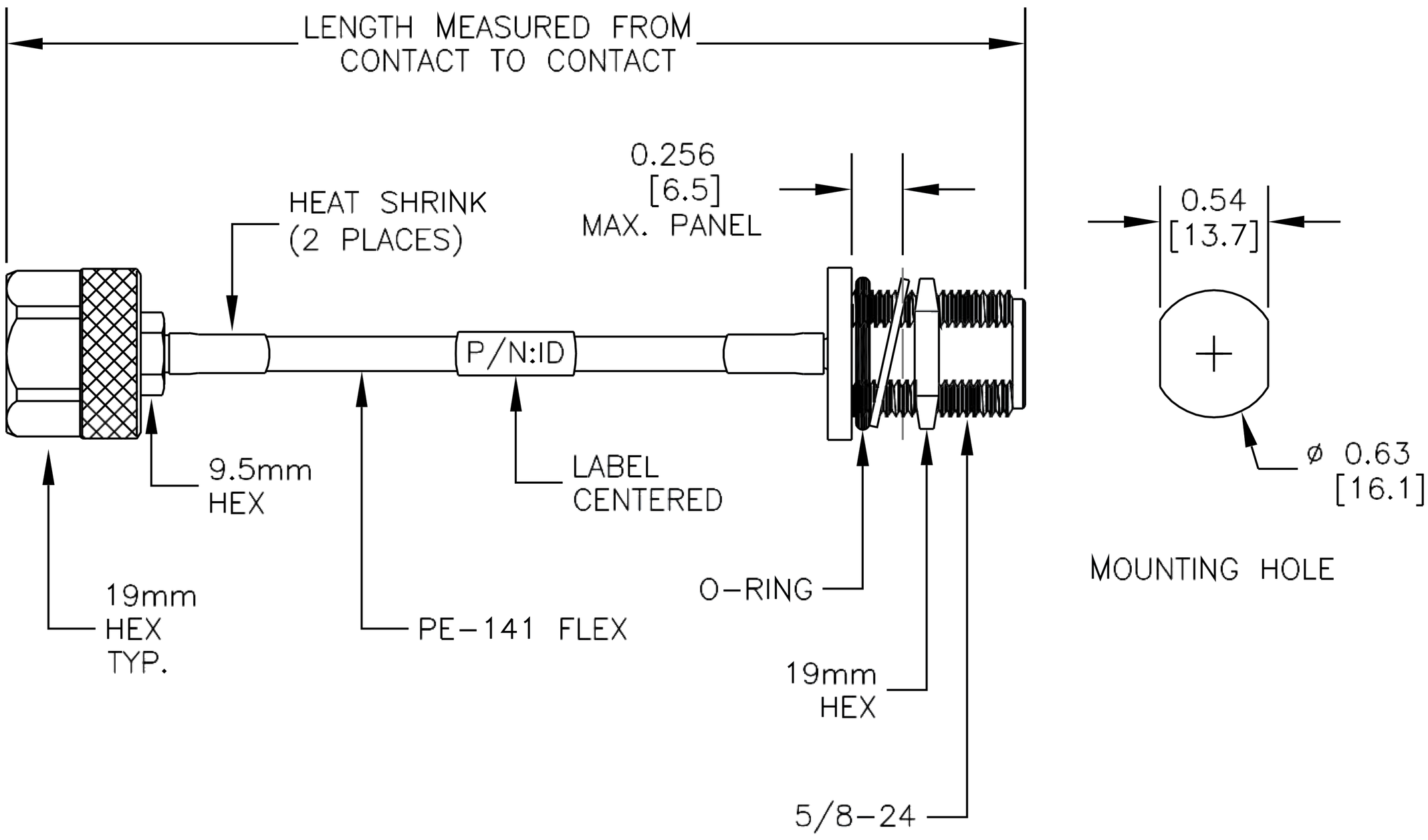

N
MALE

BULKHEAD
N
FEMALE

PASTERNACK®
THE ENGINEER'S RF SOURCE

Pasternack Enterprises, Inc.
P.O. Box 16759 | Irvine | CA | 92623

8th Floor, Building 1, Yongfu Science and Technology Center Industrial Park,
Nanzha District 5, Humen,523900, Dongguan, Guangdong, China.

ck.com

Webstie:www.ebeestock.com Email:sales@ebeestock.com

NOTES:
1. UNLESS OTHERWISE SPECIFIED ALL DIMENSIONS ARE NOMINAL.
2. ALL SPECIFICATIONS ARE SUBJECT TO CHANGE WITHOUT NOTICE AT ANY TIME.
3. DIMENSIONS ARE IN INCHES [mm].
4. LENGTH TOLERANCE IS ± 1.5% OR 3/8", WHICHEVER IS GREATER.

DWG TITLE			
PE3CA1050	FSCM NO. 53919		
CAD FILE 032715	SCALE N/A	SIZE A	150

© 2022 Ebeestock Enterprises All Rights Reserved