MIL-DTL-17 N Female to N Female Bulkhead Cable 48 Inch Lengt
h Using M17/84-ET-RG223 Coax

RF Cable Assemblies Technical Data Sheet ET29222

Configuration

- Connector 1: M39012/02-0503(N Female)
- Connector 2: M39012/03-0503(N Female Bulkhead)
- Cable: M17/84-ET-RG223

Features

- Max Frequency 11 GHz
- 65.9% Phase Velocity
- Double Shielded
- PVC Jacket
- Lot Traceability
- J-STD-Soldering
- Qualified (QPL) cable and connectors
- RF Test Plots
- Test Report
- In stock and ready to ship

Applications

- Hi-Rel
- MIL-DTL-17 Requirements
- Avionics
- IFF
- SATCOM
- ECM

Description

Ebeestock's MIL-DTL-17 cable assemblies are part of our full line of reliable RF components available for same-day shipping. These commercial-off-the-shelf (COTS), military grade cable assemblies are designed and processed with high reliability in mind. MIL-PRF-39012 connectors and MIL-C-17 coaxial cable are assembled using J-STD soldering processes and WHMA-A-620 workmanship criteria. The combination of materials, processing and acceptance testing work together to create a dependable cable assembly for applications where performance over time is important or the cost of failure is high. Each finished MIL-DTL-17 cable assembly is traceable to its component lots and a test report is available for every lot produced.

Our MIL-DTL-17 cable assembly datasheet specifications and drawing with dimensions are shown below in this PDF. Ebeestock's broad catalog of RF, microwave and millimeter wave cable assemblies allow designers to configure and customize their signal connections however they like. Whether the need is to provide reliable mil-spec connections or fielding dependable RF cable assemblies, Ebeestock has the right cable assemblies for the job. Ebeestock can also expertly build your custom cable assemblies for you and ship same day.

Referenced Specifications

IPC/WHMA-A-620	Requirements and Acceptance for Cable and Wire Harness Assemblies
MIL-DTL-17	Cables, Radio Frequency, Flexible and Semirigid, General Specification for
MIL-STD-348	Radio Frequency Connector Interfaces for MIL-DTL-3643, MIL-DTL-3650, MIL-DTL-3655, MIL-DTL-25516, MIL-PRF-31031, MIL-PRF-39012, MIL-PRF-49142, MIL-PRF...
MIL-PRF-39012	Connectors, Coaxial, Radio Frequency, General Specification for
IPC J-STD-001	Requirements for Soldered Electrical and Electronic Assemblies
IPC J-STD-006	Requirements for Electronic Grade Solder Alloys and Fluxed and Non-Fluxed Solid Solders for Electronic Soldering Applications
SAE AS5942	Marking of Electrical Insulating Materials
SAE AS23053	Insulation Sleeving, Electrical, Heat Shrinkable, General Specifications For

Click the following link (or enter part number in "SEARCH" on website) to obtain additional part information including price, inventory and certifications: MIL-DTL-17 N Female to N Female Bulkhead Cable 48 Inch Length Using M17/84-ET-RG223 Coax ET29222

8th Floor, Building 1, Yongfu Science and Technology Center Industrial Park,
Nanzha District 5, Humen,523900, Dongguan, Guangdong, China.

Webstie:www.ebeestock.com Email:sales@ebeestock.com

© 2022 Ebeestock Enterprises All Rights Reserved

MIL-DTL-17 N Female to N Female Bulkhead Cable 48 Inch Lengt
h Using M17/84-ET-RG223 Coax

RF Cable Assemblies Technical Data Sheet ET29222

SAE AS22520 Crimping Tools, Wire Termination, General Specification For

Material Specifications

Component	Specification
Cable	M17/84-ET-RG223 in accordance with MIL-DTL-17
Connector 1	M39012/02-0503 in accordance with MIL-PRF-39012
Connector 2	M39012/03-0503 in accordance with MIL-PRF-39012
Heat Shrink 1	M23053/5-106-0 in accordance with SAE AS23053
Heat Shrink 2	M23053/5-106-0 in accordance with SAE AS23053
Solder	SN63 in accordance with J-STD-006

Electrical Specifications

Description	Minimum	Typical	Maximum	Units
Frequency Range	DC		11	GHz
VSWR			1.7:1	
Velocity of Propagation		65.9		%
Capacitance		32.2 [105.64]		pF/ft [pF/m]
DC Resistance Inner Conductor		0.9 [2.95]		Ω/1000ft [Ω/Km]
Dielectric Withstanding Voltage (AC)			1,500	Vrms

Specifications by Frequency

Description	F1	F2	F3	F4	F5	Units
Frequency	0.05	0.4	1	5	11	GHz
Insertion Loss (Max.)	0.4	0.68	1.04	2.4	3.6	dB

Electrical Specification Notes:
The Insertion Loss data above is based on the performance specifications of the coax cable used in this assembly. The Insertion Loss includes an estimated insertion loss of 0.1 dB for the connectors.

Mechanical Specifications

Cable Assembly

Description	Minimum	Typical	Maximum	Units
Length*	48 [121.92]	48 [121.92]	49 [124.46]	in [cm]
Cable Outer Diameter	0.208	0.212	0.216	in

Click the following link (or enter part number in “SEARCH” on website) to obtain additional part information including price, inventory and certifications: MIL-DTL-17 N Female to N Female Bulkhead Cable 48 Inch Length Using M17/84-ET-RG223 Coax ET29222

8th Floor, Building 1, Yongfu Science and Technology Center Industrial Park,
Nanzha District 5, Humen,523900, Dongguan, Guangdong, China.

Webstie:www.ebeestock.com Email:sales@ebeestock.com

© 2022 Ebeestock Enterprises All Rights Reserved

MIL-DTL-17 N Female to N Female Bulkhead Cable 48 Inch Lengt
h Using M17/84-ET-RG223 Coax

RF Cable Assemblies Technical Data Sheet ET29222

Weight	0.37 [167.83]	lbs [g]

*Length Tolerances: +0.5, -0 inches for Length ≤ 1 foot; +1, -0 inches for Length >1 to 5 feet; +2, -0 inches for Length >5 to 10 feet; +3, -0 inches for Length >10 to 25 feet and +2%, -0 inches for Length >25 feet.

Cable Characteristics

Description	Specification
Cable Type	M17/84-ET-RG223
Impedance	50 Ohms
Inner Conductor Type	Solid
Inner Conductor Material and Plating	Silver Clad Copper
Dielectric Type	PE
Number of Shields	2
Shield Layer 1	Silver Clad Copper
Shield Layer 2	Silver Clad Copper
Outer Conductor Diameter	0.176 in [4.47 mm]
Jacket Material	PVC

Connector Characteristics

Description	Connector 1	Connector 2
Type	N Female	N Female Bulkhead
Specification	MIL-PRF-39012	MIL-PRF-39012
Impedance	50 Ohms	50 Ohms
Contact Material and Plating	Phosphor Bronze, Gold	Phosphor Bronze, Gold
Contact Plating Specification	MIL-G-45204	MIL-G-45204
Dielectric Type	Teflon	Teflon
Outer Conductor Material and Plating	Brass, Silver	Brass, Silver
Outer Conductor Plating Specification	QQ-S-365	QQ-S-365
Body Material and Plating	Brass, Silver	Brass, Silver
Body Plating Specification	QQ-S-365	QQ-S-365
Coupling Nut Material and Plating		Brass, Silver
Coupling Nut Plating Specification		QQ-S-365
Seal Gasket Material		Silicone Rubber
Contact Gage Specification	0.187 to 0.207 in	0.187 to 0.207 in

Mechanical Specification Notes:

Click the following link (or enter part number in “SEARCH” on website) to obtain additional part information including price, inventory and certifications: MIL-DTL-17 N Female to N Female Bulkhead Cable 48 Inch Length Using M17/84-ET-RG223 Coax ET29222

8th Floor, Building 1, Yongfu Science and Technology Center Industrial Park,
Nanzha District 5, Humen,523900, Dongguan, Guangdong, China.

Webstie:www.ebeestock.com Email:sales@ebeestock.com

© 2022 Ebeestock Enterprises All Rights Reserved

MIL-DTL-17 N Female to N Female Bulkhead Cable 48 Inch Lengt
h Using M17/84-ET-RG223 Coax

RF Cable Assemblies Technical Data Sheet ET29222

Environmental Specifications

Description	Specification
Temperature Operating Range	-40 to +85 deg C

Compliance Certifications (see product page for current document)

Process Specifications

Process	Specification
Soldering	in accordance with J-STD-001, class 3
Crimping	dies in accordance with SAE AS22520
Marking	shall meet the adherence requirements of SAE AS5942
Workmanship	shall be in accordance with IPC/WHMA-A-620, class 3

Tests and Inspections

Description	Sampling
Connector Gaging (pin and insulator position)	100%
Insertion Loss	100%
VSWR	100%
Dielectric Withstanding Voltage (DWV)	100%
Visual - workmanship, configuration and marking	100%
Length	C=0, 1.5AQL
Mass	C=0, 1.5AQL

Plotted and Other Data

Notes:

- Values at 25°C, sea level.

Click the following link (or enter part number in “SEARCH” on website) to obtain additional part information including price, inventory and certifications: MIL-DTL-17 N Female to N Female Bulkhead Cable 48 Inch Length Using M17/84-ET-RG223 Coax ET29222

8th Floor, Building 1, Yongfu Science and Technology Center Industrial Park,
Nanzha District 5, Humen,523900, Dongguan, Guangdong, China.

Webstie:www.ebeestock.com Email:sales@ebeestock.com

© 2022 Ebeestock Enterprises All Rights Reserved

MIL-DTL-17 N Female to N Female Bulkhead Cable 48 Inch Lengt
h Using M17/84-ET-RG223 Coax

RF Cable Assemblies Technical Data Sheet ET29222

How to Order

Part Number Configuration: **ET3M0040 - xx uu**

- **uu** — Unit of Measure:
  - cm = Centimeters
  - <blank> = Inches
- **xx** — Length
- **ET3M0040** — Base Number

Example: ET3M0040-12 = 12 inches long cable
ET3M0040-100cm = 100 cm long cable

MIL-DTL-17 N Female to N Female Bulkhead Cable 48 Inch Length Using M17/84-ET-RG223 Coax from Ebeestock Enterprises has same day shipment for domestic and International orders. Our RF, microwave and millimeter wave products maintain a 99.4% availability and are part of the broadest selection in the industry.

Click the following link (or enter part number in “SEARCH” on website) to obtain additional part information including price, inventory and certifications: MIL-DTL-17 N Female to N Female Bulkhead Cable 48 Inch Length Using M17/84-ET-RG223 Coax ET29222

URL: https://www.ebeestock.com/mil-dtl-17-n-female-to-n-female-bulkhead-cable-12-inch-length-using-m17-84-rg223-coax-0029217

The information contained in this document is accurate to the best of our knowledge and representative of the part described herein. It may be necessary to make modifications to the part and/or the documentation of the part, in order to implement improvements. Ebeestock reserves the right to make such changes as required. Unless otherwise stated, all specifications are nominal. Ebeestock does not make any representation or warranty regarding the suitability of the part described herein for any particular purpose, and Ebeestock does not assume any liability arising out of the use of any part or documentation.

8th Floor, Building 1, Yongfu Science and Technology Center Industrial Park,
Nanzha District 5, Humen,523900, Dongguan, Guangdong, China.

Webstie:www.ebeestock.com Email:sales@ebeestock.com

© 2022 Ebeestock Enterprises All Rights Reserved

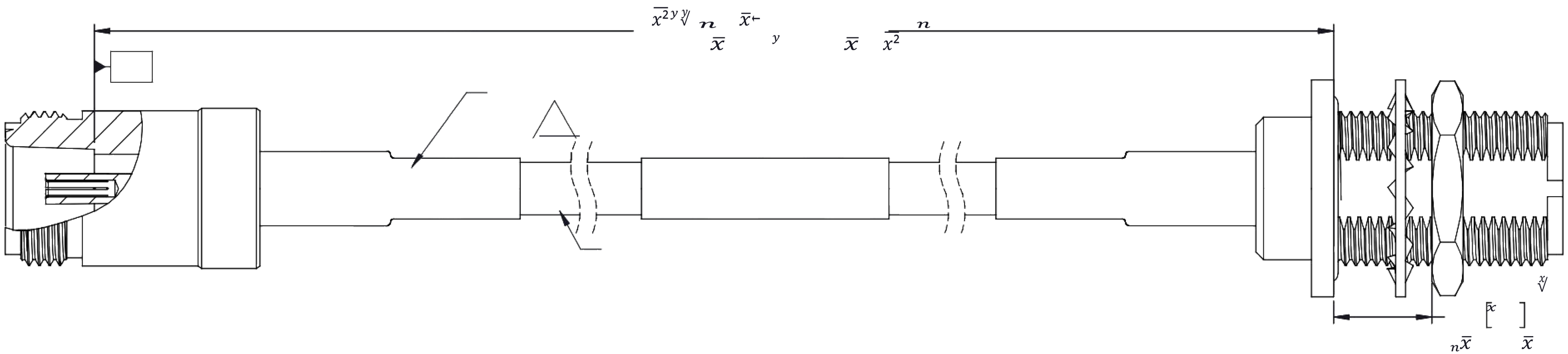

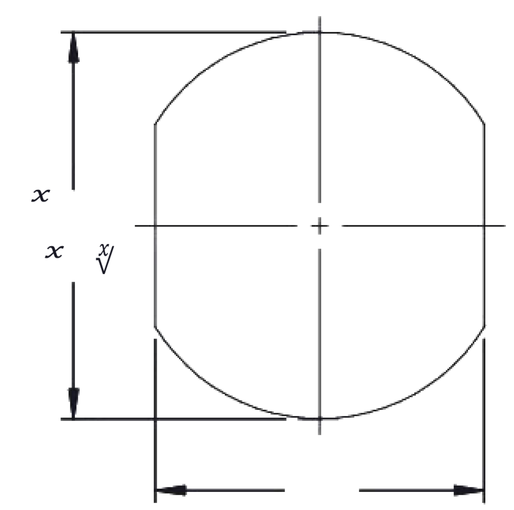

*STANDARD TOLERANCES APPLY
ONLY TO DIMENSIONS IN INCHES

ebeestock
Ebeestock.com
8th Floor, Building 1, Yongfu Science
and Technology Center Industrial Park,
Nanzha District 5, Humen,523900, Dongguan, Guangdong, China.
Webstie: www.ebeestock.com **Email:** sales@ebeestock.com

DWG TITLE

NOTES:
1. UNLESS OTHERWISE SPECIFIED ALL DIMENSIONS ARE NOMINAL.
2. ALL SPECIFICATIONS ARE SUBJECT TO CHANGE WITHOUT NOTICE AT ANY TIM
3. DIMENSIONS ARE IN INCHES [mm].

CAGE CODE 53919	CAD FILE	SCALE N/A	SIZE A

© 2022 Ebeestock Enterprises All Rights Reserved
www.ebeestock.com