MIL-DTL-17 N Female to N Female Bulkhead Cable 72 Inch Lengt
h Using M17/84-ET-RG223 Coax

# RF Cable Assemblies Technical Data Sheet ET29224

## Configuration

- Connector 1: M39012/02-0503(N Female)
- Connector 2: M39012/03-0503(N Female Bulkhead)
- Cable: M17/84-ET-RG223

## Features

- Max Frequency 11 GHz
- 65.9% Phase Velocity
- Double Shielded
- PVC Jacket
- Lot Traceability
- J-STD-Soldering
- Qualified (QPL) cable and connectors
- RF Test Plots
- Test Report
- In stock and ready to ship

## Applications

- Hi-Rel
- MIL-DTL-17 Requirements
- Avionics
- IFF
- SATCOM
- ECM

### Description

Ebeestock's MIL-DTL-17 cable assemblies are part of our full line of reliable RF components available for same-day shipping. These commercial-off-the-shelf (COTS), military grade cable assemblies are designed and processed with high reliability in mind. MIL-PRF-39012 connectors and MIL-C-17 coaxial cable are assembled using J-STD soldering processes and WHMA-A-620 workmanship criteria. The combination of materials, processing and acceptance testing work together to create a dependable cable assembly for applications where performance over time is important or the cost of failure is high. Each finished MIL-DTL-17 cable assembly is traceable to its component lots and a test report is available for every lot produced.

Our MIL-DTL-17 cable assembly datasheet specifications and drawing with dimensions are shown below in this PDF. Ebeestock's broad catalog of RF, microwave and millimeter wave cable assemblies allow designers to configure and customize their signal connections however they like. Whether the need is to provide reliable mil-spec connections or fielding dependable RF cable assemblies, Ebeestock has the right cable assemblies for the job. Ebeestock can also expertly build your custom cable assemblies for you and ship same day.

### Referenced Specifications

| | |
|---|---|
| IPC/WHMA-A-620 | Requirements and Acceptance for Cable and Wire Harness Assemblies |
| MIL-DTL-17 | Cables, Radio Frequency, Flexible and Semirigid, General Specification for |
| MIL-STD-348 | Radio Frequency Connector Interfaces for MIL-DTL-3643, MIL-DTL-3650, MIL-DTL-3655, MIL-DTL-25516, MIL-PRF-31031, MIL-PRF-39012, MIL-PRF-49142, MIL-PRF... |
| MIL-PRF-39012 | Connectors, Coaxial, Radio Frequency, General Specification for |
| IPC J-STD-001 | Requirements for Soldered Electrical and Electronic Assemblies |
| IPC J-STD-006 | Requirements for Electronic Grade Solder Alloys and Fluxed and Non-Fluxed Solid Solders for Electronic Soldering Applications |
| SAE AS5942 | Marking of Electrical Insulating Materials |
| SAE AS23053 | Insulation Sleeving, Electrical, Heat Shrinkable, General Specifications For |

Click the following link (or enter part number in "SEARCH" on website) to obtain additional part information including price, inventory and certifications: MIL-DTL-17 N Female to N Female Bulkhead Cable 72 Inch Length Using M17/84-ET-RG223 Coax ET29224

8th Floor, Building 1, Yongfu Science and Technology Center Industrial Park,
Nanzha District 5, Humen,523900, Dongguan, Guangdong, China.

Webstie:www.ebeestock.com Email:sales@ebeestock.com

© 2022 Ebeestock Enterprises All Rights Reserved

MIL-DTL-17 N Female to N Female Bulkhead Cable 72 Inch Lengt
h Using M17/84-ET-RG223 Coax

# RF Cable Assemblies Technical Data Sheet ET29224

SAE AS22520 Crimping Tools, Wire Termination, General Specification For

## Material Specifications

| Component | Specification |
|---|---|
| Cable | M17/84-ET-RG223 in accordance with MIL-DTL-17 |
| Connector 1 | M39012/02-0503 in accordance with MIL-PRF-39012 |
| Connector 2 | M39012/03-0503 in accordance with MIL-PRF-39012 |
| Heat Shrink 1 | M23053/5-106-0 in accordance with SAE AS23053 |
| Heat Shrink 2 | M23053/5-106-0 in accordance with SAE AS23053 |
| Solder | SN63 in accordance with J-STD-006 |

## Electrical Specifications

| Description | Minimum | Typical | Maximum | Units |
|---|---|---|---|---|
| Frequency Range | DC | | 11 | GHz |
| VSWR | | | 1.7:1 | |
| Velocity of Propagation | | 65.9 | | % |
| Capacitance | | 32.2 [105.64] | | pF/ft [pF/m] |
| DC Resistance Inner Conductor | | 0.9 [2.95] | | Ω/1000ft [Ω/Km] |
| Dielectric Withstanding Voltage (AC) | | | 1,500 | Vrms |

### Specifications by Frequency

| Description | F1 | F2 | F3 | F4 | F5 | Units |
|---|---|---|---|---|---|---|
| Frequency | 0.05 | 0.4 | 1 | 5 | 11 | GHz |
| Insertion Loss (Max.) | 0.49 | 0.92 | 1.46 | 3.5 | 5.3 | dB |

Electrical Specification Notes:
The Insertion Loss data above is based on the performance specifications of the coax cable used in this assembly. The Insertion Loss includes an estimated insertion loss of 0.1 dB for the connectors.

## Mechanical Specifications

### Cable Assembly

| Description | Minimum | Typical | Maximum | Units |
|---|---|---|---|---|
| Length* | 72 [182.88] | 72 [182.88] | 74 [187.96] | in [cm] |
| Cable Outer Diameter | 0.208 | 0.212 | 0.216 | in |

Click the following link (or enter part number in “SEARCH” on website) to obtain additional part information including price, inventory and certifications: MIL-DTL-17 N Female to N Female Bulkhead Cable 72 Inch Length Using M17/84-ET-RG223 Coax ET29224

8th Floor, Building 1, Yongfu Science and Technology Center Industrial Park,
Nanzha District 5, Humen,523900, Dongguan, Guangdong, China.

Webstie:www.ebeestock.com Email:sales@ebeestock.com

© 2022 Ebeestock Enterprises All Rights Reserved

MIL-DTL-17 N Female to N Female Bulkhead Cable 72 Inch Lengt
h Using M17/84-ET-RG223 Coax

# RF Cable Assemblies Technical Data Sheet ET29224

| | | |
|---|---|---|
| Weight | 0.44 [199.58] | lbs [g] |

*Length Tolerances: +0.5, -0 inches for Length ≤ 1 foot; +1, -0 inches for Length >1 to 5 feet; +2, -0 inches for Length >5 to 10 feet; +3, -0 inches for Length >10 to 25 feet and +2%, -0 inches for Length >25 feet.

## Cable Characteristics

| Description | Specification |
|---|---|
| Cable Type | M17/84-ET-RG223 |
| Impedance | 50 Ohms |
| Inner Conductor Type | Solid |
| Inner Conductor Material and Plating | Silver Clad Copper |
| Dielectric Type | PE |
| Number of Shields | 2 |
| Shield Layer 1 | Silver Clad Copper |
| Shield Layer 2 | Silver Clad Copper |
| Outer Conductor Diameter | 0.176 in [4.47 mm] |
| Jacket Material | PVC |

## Connector Characteristics

| Description | Connector 1 | Connector 2 |
|---|---|---|
| Type | N Female | N Female Bulkhead |
| Specification | MIL-PRF-39012 | MIL-PRF-39012 |
| Impedance | 50 Ohms | 50 Ohms |
| Contact Material and Plating | Phosphor Bronze, Gold | Phosphor Bronze, Gold |
| Contact Plating Specification | MIL-G-45204 | MIL-G-45204 |
| Dielectric Type | Teflon | Teflon |
| Outer Conductor Material and Plating | Brass, Silver | Brass, Silver |
| Outer Conductor Plating Specification | QQ-S-365 | QQ-S-365 |
| Body Material and Plating | Brass, Silver | Brass, Silver |
| Body Plating Specification | QQ-S-365 | QQ-S-365 |
| Coupling Nut Material and Plating | | Brass, Silver |
| Coupling Nut Plating Specification | | QQ-S-365 |
| Seal Gasket Material | | Silicone Rubber |
| Contact Gage Specification | 0.187 to 0.207 in | 0.187 to 0.207 in |

Mechanical Specification Notes:

Click the following link (or enter part number in “SEARCH” on website) to obtain additional part information including price, inventory and certifications: MIL-DTL-17 N Female to N Female Bulkhead Cable 72 Inch Length Using M17/84-ET-RG223 Coax ET29224

8th Floor, Building 1, Yongfu Science and Technology Center Industrial Park,
Nanzha District 5, Humen,523900, Dongguan, Guangdong, China.

Webstie:www.ebeestock.com Email:sales@ebeestock.com

© 2022 Ebeestock Enterprises All Rights Reserved

MIL-DTL-17 N Female to N Female Bulkhead Cable 72 Inch Lengt
h Using M17/84-ET-RG223 Coax

# RF Cable Assemblies Technical Data Sheet ET29224

## Environmental Specifications

| Description | Specification |
|---|---|
| Temperature Operating Range | -40 to +85 deg C |

## Compliance Certifications (see product page for current document)

## Process Specifications

| Process | Specification |
|---|---|
| Soldering | in accordance with J-STD-001, class 3 |
| Crimping | dies in accordance with SAE AS22520 |
| Marking | shall meet the adherence requirements of SAE AS5942 |
| Workmanship | shall be in accordance with IPC/WHMA-A-620, class 3 |

## Tests and Inspections

| Description | Sampling |
|---|---|
| Connector Gaging (pin and insulator position) | 100% |
| Insertion Loss | 100% |
| VSWR | 100% |
| Dielectric Withstanding Voltage (DWV) | 100% |
| Visual - workmanship, configuration and marking | 100% |
| Length | C=0, 1.5AQL |
| Mass | C=0, 1.5AQL |

## Plotted and Other Data

Notes:

- Values at 25°C, sea level.

Click the following link (or enter part number in “SEARCH” on website) to obtain additional part information including price, inventory and certifications: MIL-DTL-17 N Female to N Female Bulkhead Cable 72 Inch Length Using M17/84-ET-RG223 Coax ET29224

8th Floor, Building 1, Yongfu Science and Technology Center Industrial Park,
Nanzha District 5, Humen,523900, Dongguan, Guangdong, China.

Webstie:www.ebeestock.com Email:sales@ebeestock.com

© 2022 Ebeestock Enterprises All Rights Reserved

MIL-DTL-17 N Female to N Female Bulkhead Cable 72 Inch Lengt
h Using M17/84-ET-RG223 Coax

# RF Cable Assemblies Technical Data Sheet ET29224

## How to Order

Part Number Configuration: **ET3M0040 - xx uu**

- **uu** — Unit of Measure:
  - cm = Centimeters
  - <blank> = Inches
- **xx** — Length
- **ET3M0040** — Base Number

Example: ET3M0040-12 = 12 inches long cable
ET3M0040-100cm = 100 cm long cable

MIL-DTL-17 N Female to N Female Bulkhead Cable 72 Inch Length Using M17/84-ET-RG223 Coax from Ebeestock Enterprises has same day shipment for domestic and International orders. Our RF, microwave and millimeter wave products maintain a 99.4% availability and are part of the broadest selection in the industry.

Click the following link (or enter part number in “SEARCH” on website) to obtain additional part information including price, inventory and certifications: MIL-DTL-17 N Female to N Female Bulkhead Cable 72 Inch Length Using M17/84-ET-RG223 Coax ET29224

**URL:** https://www.ebeestock.com/mil-dtl-17-n-female-to-n-female-bulkhead-cable-12-inch-length-using-m17-84-rg223-coax-0029217

The information contained in this document is accurate to the best of our knowledge and representative of the part described herein. It may be necessary to make modifications to the part and/or the documentation of the part, in order to implement improvements. Ebeestock reserves the right to make such changes as required. Unless otherwise stated, all specifications are nominal. Ebeestock does not make any representation or warranty regarding the suitability of the part described herein for any particular purpose, and Ebeestock does not assume any liability arising out of the use of any part or documentation.

8th Floor, Building 1, Yongfu Science and Technology Center Industrial Park,
Nanzha District 5, Humen,523900, Dongguan, Guangdong, China.

Webstie:www.ebeestock.com Email:sales@ebeestock.com

© 2022 Ebeestock Enterprises All Rights Reserved

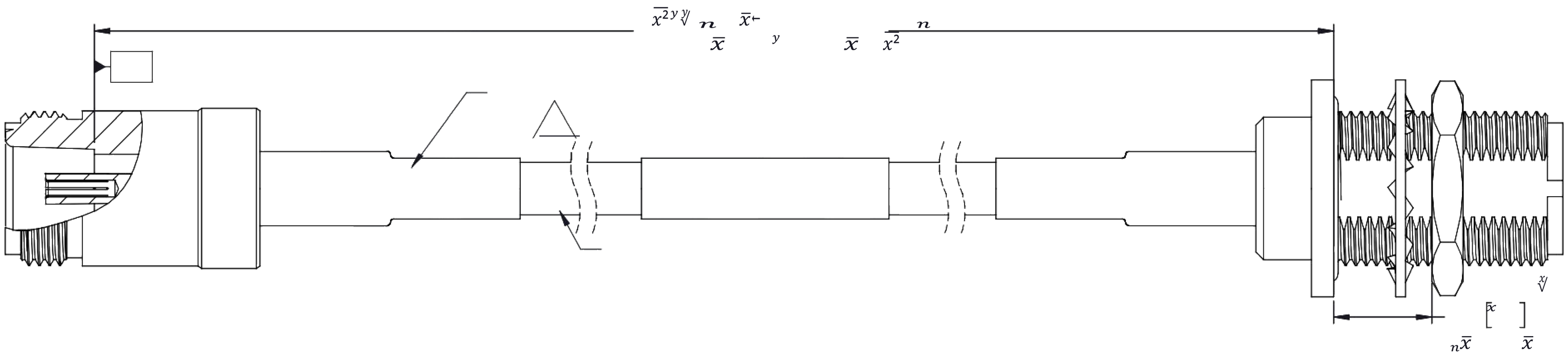

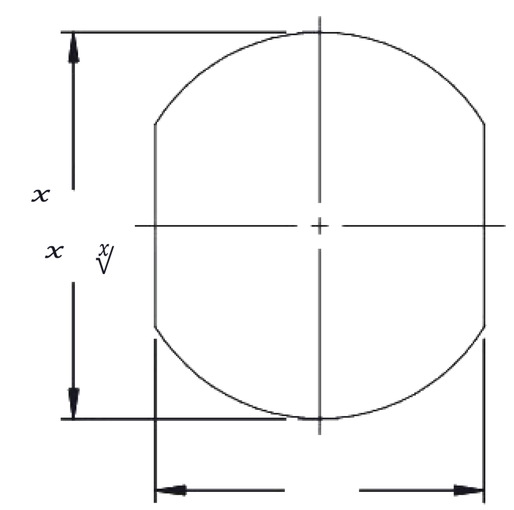

*STANDARD TOLERANCES APPLY
ONLY TO DIMENSIONS IN INCHES


ebeestock
Ebeestock.com
8th Floor, Building 1, Yongfu Science
and Technology Center Industrial Park,
Nanzha District 5, Humen,523900, Dongguan, Guangdong, China.
**Webstie:** www.ebeestock.com **Email:** sales@ebeestock.com


**DWG TITLE**

**NOTES:**
1. UNLESS OTHERWISE SPECIFIED ALL DIMENSIONS ARE NOMINAL.
2. ALL SPECIFICATIONS ARE SUBJECT TO CHANGE WITHOUT NOTICE AT ANY TIM
3. DIMENSIONS ARE IN INCHES [mm].

| CAGE CODE 53919 | CAD FILE | SCALE N/A | SIZE A |
|---|---|---|---|


© 2022 Ebeestock Enterprises All Rights Reserved
www.ebeestock.com