N Female Bulkhead to SMA Male Right Angle Cable 60 Inch Leng th Using ET-P195 Coax

RF Cable Assemblies Technical Data Sheet ET29581

Configuration

- Connector 1: N Female Bulkhead
- Connector 2: SMA Male Right Angle
- Cable Type: ET-P195

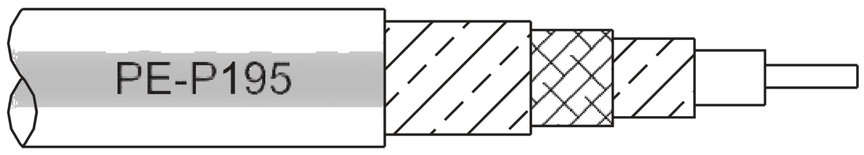

Features

- Max Frequency 4 GHz
- 70% Phase Velocity
- Triple Shielded
- FEP Jacket

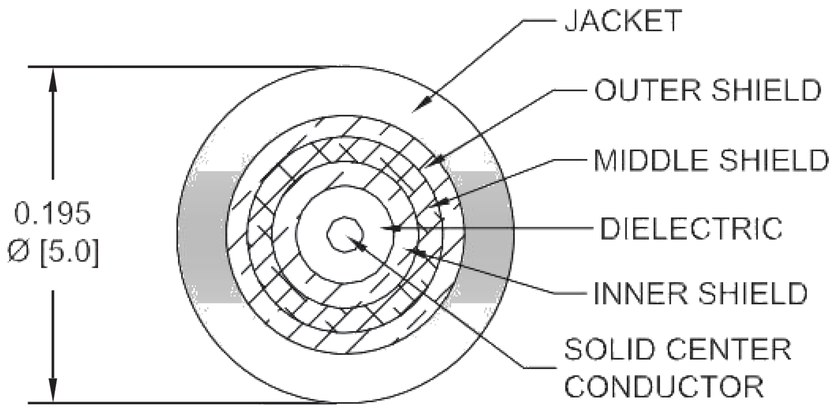

Applications

- General Purpose
- Laboratory Use

Description

Ebeestock's ET29581 type N female bulkhead to SMA male right angle 60 inch cable using ET-P195 coax is part of our full line of RF components available for same-day shipping. Ebeestock's flexible RF cable assemblies are ideal for applica- tions where tight bends and flexure are required. This Ebeestock type N to SMA cable assembly has a female to male gender configuration with 50 ohm flexible ET-P195 coax. The ET29581 type N female to SMA male cable assembly operates to 4 GHz. The right angle SMA interface on the ET-P195 cable allows for easier connections in tight spaces. Our RF cable assembly with type N bulkhead interface allows designers to create external connections on their product enclosures, and can be used in a variety of other rack mount and panel mount applications. The triple shielding of this Ebeestock cable assembly provides excellent shielding effectiveness.

Custom versions of most RF cable assemblies can be built and shipped same day. Custom cable assembly lengths can be obtained by specifying the desired length on the web site at time of order or by contacting a sales representative. Other avail- able RF cable assembly value added services include connector orientation or clocking, heat shrink booting and custom label- ing. RF testing can also be performed to document the electrical performance of your cable assembly.

Electrical Specifications

Description	Minimum	Typical	Maximum	Units
Frequency Range	DC		4	GHz
VSWR			1.5:1	
Velocity of Propagation		70		%
Capacitance		29 [95.14]		pF/ft [pF/m]

Click the following link (or enter part number in "SEARCH" on website) to obtain additional part information including price, inventory and certifications: N Female Bulkhead to SMA Male Right Angle Cable 60 Inch Length Using ET-P195 Coax ET29581

8th Floor, Building 1, Yongfu Science and Technology Center Industrial Park,
Nanzha District 5, Humen,523900, Dongguan, Guangdong, China.

Webstie:www.ebeestock.com Email:sales@ebeestock.com

© 2022 Ebeestock Enterprises All Rights Reserved

N Female Bulkhead to SMA Male Right Angle Cable 60 Inch Leng th Using ET-P195 Coax

RF Cable Assemblies Technical Data Sheet ET29581

Specifications by Frequency

Description	F1	F2	F3	F4	F5	Units
Frequency	0.25	0.5	1	2.5	4	GHz
Insertion Loss (Max.)	0.59	0.74	0.93	1.28	1.64	dB

Electrical Specification Notes:
The Insertion Loss data above is based on the performance specifications of the coax used in this assembly. The Insertion Loss includes an estimated insertion loss of 0.3dB of connectro loss.

Mechanical Specifications

Cable Assembly

Length*	60 in [152.4 cm]

Cable

Cable Type	ET-P195
Impedance	50 Ohms
Inner Conductor Type	Solid
Inner Conductor Material and Plating	Copper Clad Steel, Silver
Dielectric Type	PTFE
Number of Shields	3
Shield Layer 1	Silver Plated Copper Braid
Shield Layer 2	Aluminum Tape
Shield Layer 3	Silver Plated Copper Braid
Jacket Material	FEP, Tan
Jacket Diameter	0.195 in [4.95 mm]
Repeated Minimum Bend Radius	1 in [25.4 mm]

Click the following link (or enter part number in “SEARCH” on website) to obtain additional part information including price, inventory and certifications: N Female Bulkhead to SMA Male Right Angle Cable 60 Inch Length Using ET-P195 Coax ET29581

8th Floor, Building 1, Yongfu Science and Technology Center Industrial Park,
Nanzha District 5, Humen,523900, Dongguan, Guangdong, China.

Webstie:www.ebeestock.com Email:sales@ebeestock.com

© 2022 Ebeestock Enterprises All Rights Reserved

N Female Bulkhead to SMA Male Right Angle Cable 60 Inch Leng
th Using ET-P195 Coax

RF Cable Assemblies Technical Data Sheet ET29581

Connectors

Description	Connector 1	Connector 2
Type	N Female Bulkhead	SMA Male Right Angle
Specification		MIL-STD-348A
Impedance	50 Ohms	50 Ohms
Contact Material and Plating		Brass, Gold
Contact Plating Specification		50 µin minimum
Dielectric Type		PTFE
Body Material and Plating	Brass, Nickel	Brass, Nickel
Body Plating Specification		100 µin minimum
Coupling Nut Material and Plating		Brass, Nickel
Coupling Nut Plating Specification		100 µin minimum
Hex Size		5/16 inch
Torque		3 in-lbs [0.34 Nm]

Mechanical Specification Notes:
*All cable assemblies have a length tolerance of 1.5% or ± 3/8”, whichever is greater.

Compliance Certifications (see product page for current document)

Plotted and Other Data

Notes:

Click the following link (or enter part number in “SEARCH” on website) to obtain additional part information including price, inventory and certifications: N Female Bulkhead to SMA Male Right Angle Cable 60 Inch Length Using ET-P195 Coax ET29581

8th Floor, Building 1, Yongfu Science and Technology Center Industrial Park,
Nanzha District 5, Humen,523900, Dongguan, Guangdong, China.

Webstie:www.ebeestock.com Email:sales@ebeestock.com

© 2022 Ebeestock Enterprises All Rights Reserved

N Female Bulkhead to SMA Male Right Angle Cable 60 Inch Leng
th Using ET-P195 Coax

RF Cable Assemblies Technical Data Sheet ET29581

How to Order

Part Number Configuration: **ET3W06405 - xx uu**

- uu — Unit of Measure:
  - cm = Centimeters
  - <blank> = Inches
- xx — Length
- ET3W06405 — Base Number

Example: ET3W06405-12 = 12 inches long cable
ET3W06405-100cm = 100 cm long cable

N Female Bulkhead to SMA Male Right Angle Cable 60 Inch Length Using ET-P195 Coax from Ebeestock Enterprises has same day shipment for domestic and International orders. Our RF, microwave and millimeter wave products maintain a 99.4% availability and are part of the broadest selection in the industry.

Click the following link (or enter part number in “SEARCH” on website) to obtain additional part information including price, inventory and certifications: N Female Bulkhead to SMA Male Right Angle Cable 60 Inch Length Using ET-P195 Coax ET29581

URL: https://www.ebeestock.com/n-female-bulkhead-to-sma-male-right-angle-cable-12-inch-length-using-pe-p195-coax-0029577

The information contained in this document is accurate to the best of our knowledge and representative of the part described herein. It may be necessary to make modifications to the part and/or the documentation of the part, in order to implement improvements. Ebeestock reserves the right to make such changes as required. Unless otherwise stated, all specifications are nominal. Ebeestock does not make any representation or warranty regarding the suitability of the part described herein for any particular purpose, and Ebeestock does not assume any liability arising out of the use of any part or documentation.

8th Floor, Building 1, Yongfu Science and Technology Center Industrial Park,
Nanzha District 5, Humen,523900, Dongguan, Guangdong, China.

Webstie:www.ebeestock.com Email:sales@ebeestock.com

© 2022 Ebeestock Enterprises All Rights Reserved

© 2022 Ebeestock Enterprises All Rights Reserved

www.ebeestock.com

REVISIONS			
REV.	DESCRIPTION	DATE	APPROVED
A	INITIAL RELEASE	04/23/19	S.ELLIS

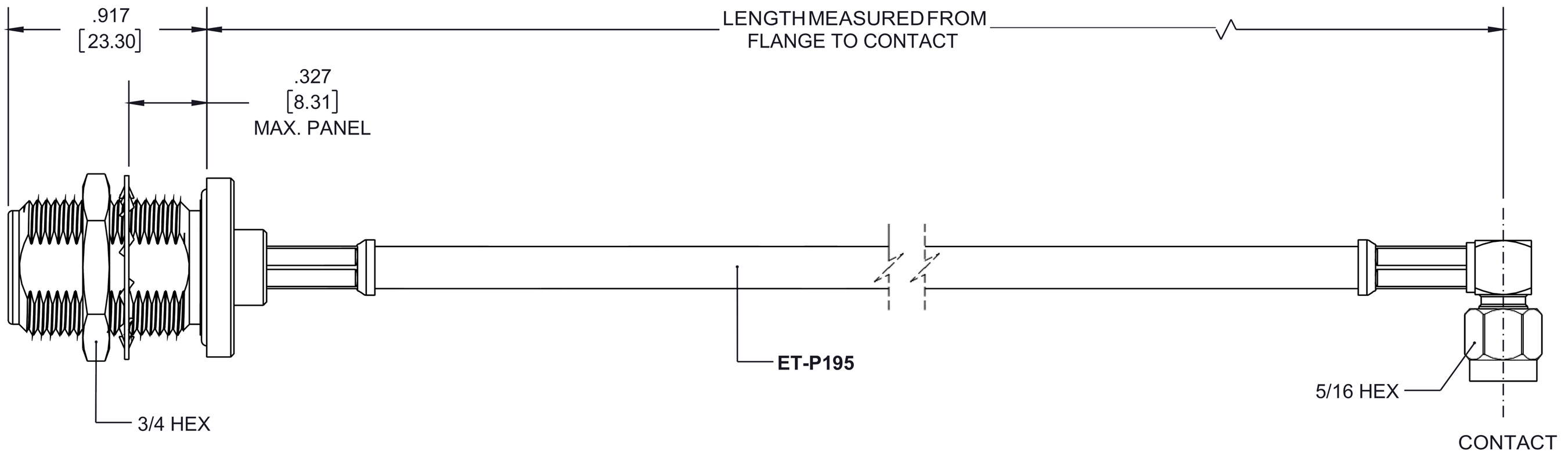

N FEMALE BULKHEAD

SMA MALE RA

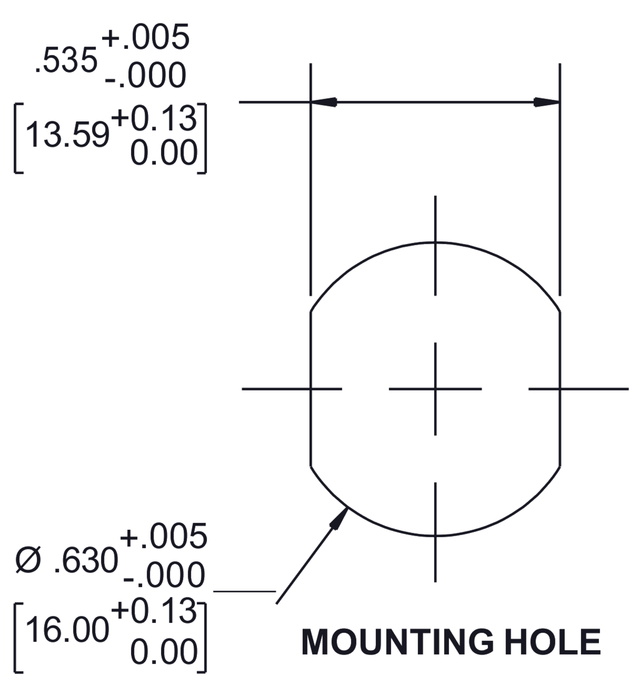

MOUNTING HOLE

UNLESS OTHERWISE SPECIFIED
LEADING DIMENSIONS ARE INCHES
DIMENSIONS IN [ ] ARE MILLIMETERS

TOLERANCES:

.X=± .2	[5.08]	FRACTIONS
.XX=± .01	[.25]	± 1/32
.XXX=± .005	[.13]	ANGLES ± 1°

ALL DIMENSIONS SHOWN ARE FOR REFERENCE ONLY.

THIRD ANGLE PROJECTION

PASTERNACK
an INFINITE brand
8th Floor, Building 1, Yongfu Science and Technology Center Industrial Park
P.O.Box 16759, Irvine, CA 92623.
Phone: 1.949.261.1920 | 1.866.727.8376
Fax: 1.949.261.7451
e-mail: sales@Ebeestock.com

THE INFORMATION AND DESIGN IN THIS DOCUMENT IS THE PROPERTY OF Ebeestock CORPORATION. ALL RIGHTS RESERVED.

SHEET 1 OF 1

SCALE N/A

SIZE	CAGE	DRAWN BY	PART NUMBER	REV
A	53919	K.DANG	ET3W06405	A

THESE COMMODITIES, TECHNOLOGY OR SOFTWARE WERE EXPORTED FROM THE UNITED STATES IN ACCORDANCE WITH THE EXPORT ADMINISTRATION REGULATIONS. DIVERSION CONTRARY TO U.S. LAW PROHIBITED.