N Male to QN Male Right Angle Cable 36 Inch Length Using ET-RG223 Coax with HeatShrink, LF Solder

RF Cable Assemblies Technical Data Sheet ET29597

Configuration

- Connector 1: N Male
- Connector 2: QN Male Right Angle
- Cable Type: ET-RG223

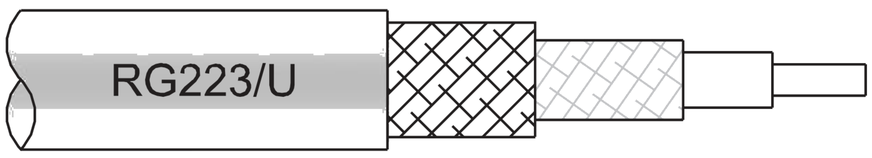

Features

- Max Frequency 4 GHz
- 66% Phase Velocity
- Double Shielded
- PVC Jacket

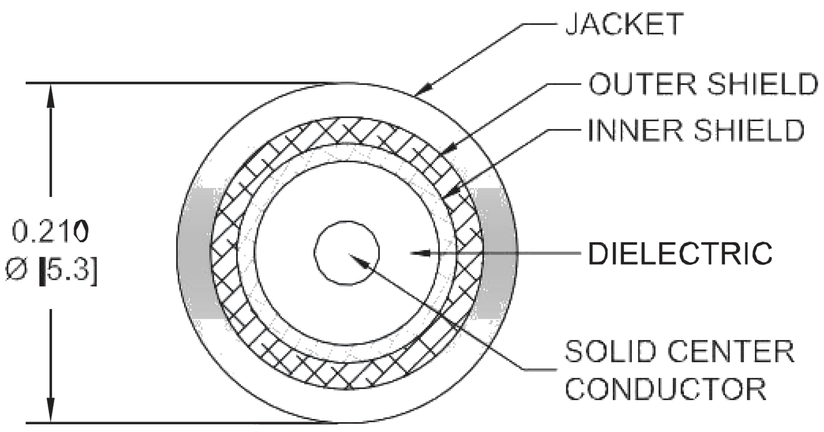

Applications

- General Purpose
- Laboratory Use

Description

Ebeestock's ET29597 type N male to QN male right angle 36 inch cable using ET-RG223 coax is part of our full line of RF components available for same-day shipping. Ebeestock's flexible RF cable assemblies are ideal for applications where tight bends and flexure are required. This Ebeestock type N to QN cable assembly has a male to male gender configuration with 50 ohm flexible ET-RG223 coax. The ET29597 type N male to QN male cable assembly operates to 4 GHz. The right angle QN interface on the ET-RG223 cable allows for easier connections in tight spaces. The double shielding of this Ebeestock cable assembly provides excellent shielding effectiveness.

Custom versions of most RF cable assemblies can be built and shipped same day. Custom cable assembly lengths can be obtained by specifying the desired length on the web site at time of order or by contacting a sales representative. Other available RF cable assembly value added services include connector orientation or clocking, heat shrink booting and custom labeling. RF testing can also be performed to document the electrical performance of your cable assembly.

Electrical Specifications

Description	Minimum	Typical	Maximum	Units
Frequency Range	DC		4	GHz
VSWR			1.5:1	
Velocity of Propagation		66		%
Capacitance		30.8 [101.05]		pF/ft [pF/m]
Operating Voltage (AC)			1,000	Vrms

Click the following link (or enter part number in "SEARCH" on website) to obtain additional part information including price, inventory and certifications: N Male to QN Male Right Angle Cable 36 Inch Length Using ET-RG223 Coax with HeatShrink, LF Solder ET29597

8th Floor, Building 1, Yongfu Science and Technology Center Industrial Park,
Nanzha District 5, Humen,523900, Dongguan, Guangdong, China.

Webstie:www.ebeestock.com Email:sales@ebeestock.com

© 2022 Ebeestock Enterprises All Rights Reserved

N Male to QN Male Right Angle Cable 36 Inch Length Using ET-RG223 Coax with HeatShrink, LF Solder

PICTURE UNAVAILABLE

RF Cable Assemblies Technical Data Sheet ET29597

Specifications by Frequency

Description	F1	F2	F3	F4	F5	Units
Frequency	0.25	0.5	1	2.5	4	GHz
Insertion Loss (Max.)	0.45	0.5	0.71	0.86	1.13	dB

Electrical Specification Notes:
The Insertion Loss data above is based on the performance specifications of the coax use in this assembly. The Insertion Loss includes an estimated insertion loss of 0.3dB of connector Loss

Mechanical Specifications

Cable Assembly

Length*	36 in [914.4 mm]
Diameter	0.83 in [21.08 mm]

Cable

Cable Type	ET-RG223
Impedance	50 Ohms
Inner Conductor Type	Solid
Inner Conductor Material and Plating	Copper, Silver
Dielectric Type	PE
Number of Shields	2
Shield Layer 1	Silver Plated Copper Braid
Shield Layer 2	Silver Plated Copper Braid
Jacket Material	PVC, Black
Jacket Diameter	0.209 in [5.31 mm]
Repeated Minimum Bend Radius	1 in [25.4 mm]

Click the following link (or enter part number in “SEARCH” on website) to obtain additional part information including price, inventory and certifications: N Male to QN Male Right Angle Cable 36 Inch Length Using ET-RG223 Coax with HeatShrink, LF Solder ET29597

8th Floor, Building 1, Yongfu Science and Technology Center Industrial Park,
Nanzha District 5, Humen,523900, Dongguan, Guangdong, China.

Webstie:www.ebeestock.com Email:sales@ebeestock.com

© 2022 Ebeestock Enterprises All Rights Reserved

N Male to QN Male Right Angle Cable 36 Inch Length Using ET-RG223 Coax with HeatShrink, LF Solder

PICTURE UNAVAILABLE

RF Cable Assemblies Technical Data Sheet ET29597

Connectors

Description	Connector 1	Connector 2
Type	N Male	QN Male Right Angle
Specification	MIL-STD-348A	
Impedance	50 Ohms	50 Ohms
Mating Cycles		100
Contact Material and Plating	Brass, Gold	Brass, Gold
Dielectric Type	Teflon	PTFE
Body Material and Plating	Brass, Tri-Metal	Brass, Tri-Metal
Coupling Nut Material and Plating	Brass, Tri-Metal	
Hex Size	18 mm	
Torque	9 in-lbs [1.02 Nm]	

Mechanical Specification Notes:
*All cable assemblies have a length tolerance of 1.5% or ± 3/8”, whichever is greater.

Environmental Specifications

Temperature

Operating Range -40 to +80 deg C

Compliance Certifications (see product page for current document)

Plotted and Other Data

Notes:

Click the following link (or enter part number in “SEARCH” on website) to obtain additional part information including price, inventory and certifications: N Male to QN Male Right Angle Cable 36 Inch Length Using ET-RG223 Coax with HeatShrink, LF Solder ET29597

8th Floor, Building 1, Yongfu Science and Technology Center Industrial Park,
Nanzha District 5, Humen,523900, Dongguan, Guangdong, China.

Webstie:www.ebeestock.com Email:sales@ebeestock.com

© 2022 Ebeestock Enterprises All Rights Reserved

N Male to QN Male Right Angle Cable 36 Inch Length Using ET-RG223 Coax with HeatShrink, LF Solder

RF Cable Assemblies Technical Data Sheet ET29597

How to Order

Part Number Configuration: **ET3W06872LF/HS - xx uu**

- **uu** — Unit of Measure:
  - cm = Centimeters
  - <blank> = Inches
- **xx** — Length
- **ET3W06872LF/HS** — Base Number

Example: ET3W06872LF/HS-12 = 12 inches long cable
ET3W06872LF/HS-100cm = 100 cm long cable

N Male to QN Male Right Angle Cable 36 Inch Length Using ET-RG223 Coax with HeatShrink, LF Solder from Ebeestock Enterprises has same day shipment for domestic and International orders. Our RF, microwave and millimeter wave products maintain a 99.4% availability and are part of the broadest selection in the industry.

Click the following link (or enter part number in “SEARCH” on website) to obtain additional part information including price, inventory and certifications: N Male to QN Male Right Angle Cable 36 Inch Length Using ET-RG223 Coax with HeatShrink, LF Solder ET29597

URL: https://www.ebeestock.com/n-male-to-qn-male-right-angle-cable-12-inch-length-using-rg223-coax-with-heatshrink-lf-solder-0029595

The information contained in this document is accurate to the best of our knowledge and representative of the part described herein. It may be necessary to make modifications to the part and/or the documentation of the part, in order to implement improvements. Ebeestock reserves the right to make such changes as required. Unless otherwise stated, all specifications are nominal. Ebeestock does not make any representation or warranty regarding the suitability of the part described herein for any particular purpose, and Ebeestock does not assume any liability arising out of the use of any part or documentation.

8th Floor, Building 1, Yongfu Science and Technology Center Industrial Park,
Nanzha District 5, Humen,523900, Dongguan, Guangdong, China.

Webstie:www.ebeestock.com Email:sales@ebeestock.com

© 2022 Ebeestock Enterprises All Rights Reserved

© 2022 Ebeestock Enterprises All Rights Reserved

www.ebeestock.com

REVISIONS			
REV.	DESCRIPTION	DATE	APPROVED
A	INITIAL RELEASE	05/02/19	S.ELLIS

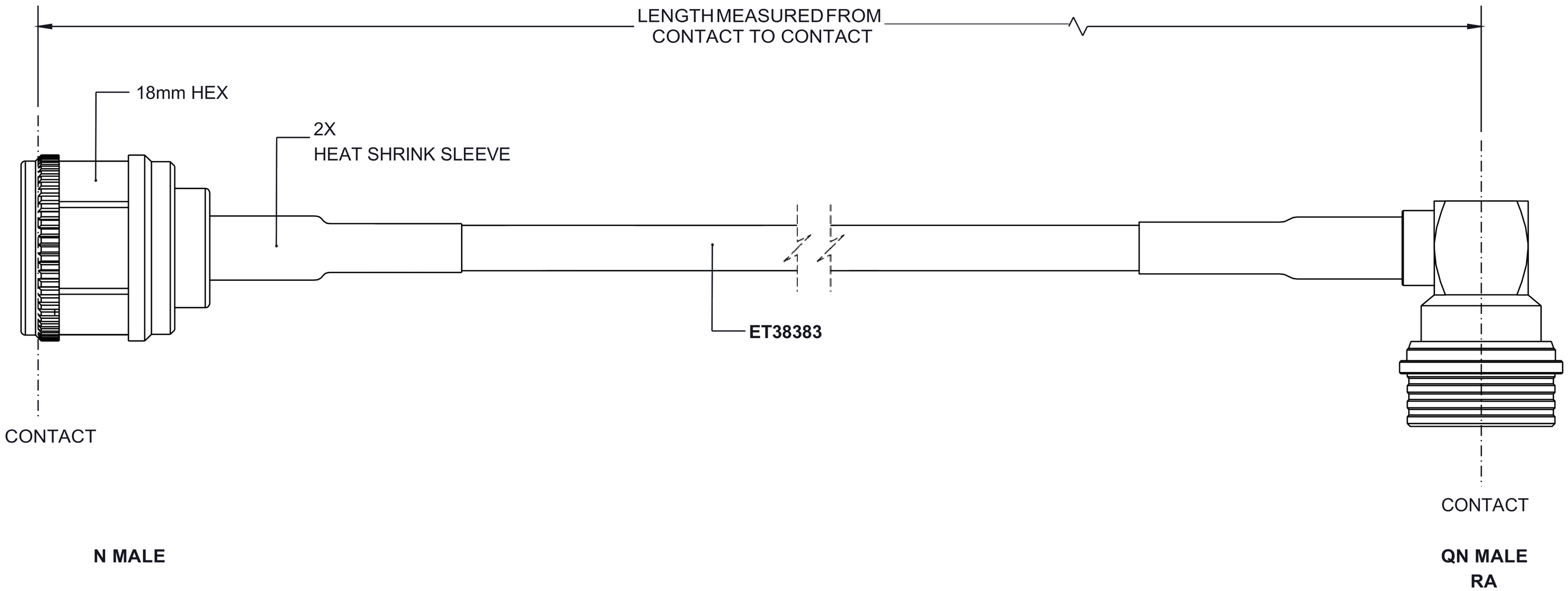

UNLESS OTHERWISE SPECIFIED
LEADING DIMENSIONS ARE INCHES
DIMENSIONS IN [ ] ARE MILLIMETERS

TOLERANCES:

.X=± .2	[5.08]	FRACTIONS
.XX=± .01	[.25]	± 1/32
.XXX=± .005	[.13]	ANGLES ± 1°

ALL DIMENSIONS SHOWN
ARE FOR REFERENCE ONLY.

THIRD ANGLE PROJECTION

ebeestock
Ebeestock.com
8th Floor, Building 1, Yongfu Science
and Technology Center Industrial Park,
Nanzha District 5, Humen,523900, Dongguan, Guangdong, China.
Webstie: www.ebeestock.com **Email:** sales@ebeestock.com

THE INFORMATION AND
DESIGN IN THIS DOCUMENT
IS THE PROPERTY OF
Ebeestock CORPORATION. ALL
RIGHTS RESERVED.

SHEET 1 OF 1

SCALE N/A

SIZE	CAGE	DRAWN BY	PART NUMBER	REV
A	53919	K.DANG	ET3W06872LF/HS	A

THESE COMMODITIES, TECHNOLOGY OR SOFTWARE WERE EXPORTED FROM THE UNITED STATES IN ACCORDANCE WITH THE EXPORT ADMINISTRATION REGULATIONS. DIVERSION CONTRARY TO U.S. LAW PROHIBITED.