N Male to TNC Female Bulkhead Cable 60 Inch Length Using ET-RG400 Coax

# RF Cable Assemblies Technical Data Sheet ET29608

## Configuration

- Connector 1: N Male
- Connector 2: TNC Female Bulkhead
- Cable Type: ET-RG400

## Features

- Max Frequency 6 GHz
- 70% Phase Velocity
- Double Shielded
- FEP Jacket

## Applications

- General Purpose
- Laboratory Use

### Description

Ebeestock's ET29608 type N male to TNC female bulkhead 60 inch cable using ET-RG400 coax is part of our full line of RF components available for same-day shipping. Ebeestock's flexible RF cable assemblies are ideal for applications where tight bends and flexure are required. This Ebeestock type N to TNC cable assembly has a male to female gender configura- tion with 50 ohm flexible ET-RG400 coax. The ET29608 type N male to TNC female cable assembly operates to 6 GHz. Our RF cable assembly with TNC bulkhead interface allows designers to create external connections on their product enclo- sures, and can be used in a variety of other rack mount and panel mount applications. The double shielding of this Ebeestock cable assembly provides excellent shielding effectiveness.

Custom versions of most RF cable assemblies can be built and shipped same day. Custom cable assembly lengths can be obtained by specifying the desired length on the web site at time of order or by contacting a sales representative. Other avail- able RF cable assembly value added services include connector orientation or clocking, heat shrink booting and custom label- ing. RF testing can also be performed to document the electrical performance of your cable assembly.

Click the following link (or enter part number in "SEARCH" on website) to obtain additional part information including price, inventory and certifications: N Male to TNC Female Bulkhead Cable 60 Inch Length Using ET-RG400 Coax ET29608

8th Floor, Building 1, Yongfu Science and Technology Center Industrial Park,
Nanzha District 5, Humen,523900, Dongguan, Guangdong, China.

Webstie:www.ebeestock.com Email:sales@ebeestock.com

© 2022 Ebeestock Enterprises All Rights Reserved

N Male to TNC Female Bulkhead Cable 60 Inch Length Using ET-RG400 Coax

# RF Cable Assemblies Technical Data Sheet ET29608

## Electrical Specifications

| Description | Minimum | Typical | Maximum | Units |
|---|---|---|---|---|
| Frequency Range | DC | | 6 | GHz |
| VSWR | | | 1.45:1 | |
| Velocity of Propagation | | 70 | | % |
| Capacitance | | 32 [104.99] | | pF/ft [pF/m] |

## Specifications by Frequency

| Description | F1 | F2 | F3 | F4 | F5 | Units |
|---|---|---|---|---|---|---|
| Frequency | 0.25 | 0.5 | 1 | 2.5 | 6 | GHz |
| Insertion Loss (Max.) | 0.45 | 0.5 | 0.95 | 1 | 1.85 | dB |

Electrical Specification Notes:
The Insertion Loss data above is based on the performance specifications of the coax used in this assembly. Insertion Loss is estimated as 0.1 dB per connector.

## Mechanical Specifications

### Cable Assembly

| | |
|---|---|
| Length* | 60 in [152.4 cm] |
| Diameter | 0.812 in [20.62 mm] |

### Cable

| | |
|---|---|
| Cable Type | ET-RG400 |
| Impedance | 50 Ohms |
| Inner Conductor Type | Stranded |
| Inner Conductor Material and Plating | Copper, Silver |
| Dielectric Type | PTFE |
| Number of Shields | 2 |
| Shield Layer 1 | Silver Plated Copper Braid |
| Shield Layer 2 | Silver Plated Copper Braid |
| Jacket Material | FEP, Tan |
| Jacket Diameter | 0.195 in [4.95 mm] |
| Repeated Minimum Bend Radius | 1 in [25.4 mm] |

Click the following link (or enter part number in “SEARCH” on website) to obtain additional part information including price, inventory and certifications: N Male to TNC Female Bulkhead Cable 60 Inch Length Using ET-RG400 Coax ET29608

8th Floor, Building 1, Yongfu Science and Technology Center Industrial Park,
Nanzha District 5, Humen,523900, Dongguan, Guangdong, China.

Webstie:www.ebeestock.com Email:sales@ebeestock.com

© 2022 Ebeestock Enterprises All Rights Reserved

N Male to TNC Female Bulkhead Cable 60 Inch Length Using ET-RG400 Coax

# RF Cable Assemblies Technical Data Sheet ET29608

## Connectors

| Description | Connector 1 | Connector 2 |
|---|---|---|
| Type | N Male | TNC Female Bulkhead |
| Specification | MIL-STD-348 | MIL-STD-348A |
| Impedance | 50 Ohms | 50 Ohms |
| Contact Material and Plating | Brass, Silver | Brass, Gold |
| Contact Plating Specification | ASTM-B700 | 30 µin minimum |
| Dielectric Type | PTFE | PTFE |
| Body Material and Plating | Brass, Nickel | Brass, Nickel |
| Body Plating Specification | ASTM-B689 | 100 µin minimum |
| Coupling Nut Material and Plating | Brass, Nickel | |
| Coupling Nut Plating Specification | ASTM-B689 | |

## Environmental Specifications

### Temperature

Operating Range -55 to +165 deg C

## Compliance Certifications (see product page for current document)

## Plotted and Other Data

Notes:

Click the following link (or enter part number in “SEARCH” on website) to obtain additional part information including price, inventory and certifications: N Male to TNC Female Bulkhead Cable 60 Inch Length Using ET-RG400 Coax ET29608

8th Floor, Building 1, Yongfu Science and Technology Center Industrial Park,
Nanzha District 5, Humen,523900, Dongguan, Guangdong, China.

Webstie:www.ebeestock.com Email:sales@ebeestock.com

© 2022 Ebeestock Enterprises All Rights Reserved

N Male to TNC Female Bulkhead Cable 60 Inch Length Using ET-RG400 Coax

# RF Cable Assemblies Technical Data Sheet ET29608

## How to Order

Part Number Configuration: **ET3W07264 - xx uu**

- ET3W07264: Base Number
- xx: Length
- uu: Unit of Measure:
  - cm = Centimeters
  - <blank> = Inches

Example: ET3W07264-12 = 12 inches long cable
ET3W07264-100cm = 100 cm long cable

N Male to TNC Female Bulkhead Cable 60 Inch Length Using ET-RG400 Coax from Ebeestock Enterprises has same day shipment for domestic and International orders. Our RF, microwave and millimeter wave products maintain a 99.4% availability and are part of the broadest selection in the industry.

Click the following link (or enter part number in “SEARCH” on website) to obtain additional part information including price, inventory and certifications: N Male to TNC Female Bulkhead Cable 60 Inch Length Using ET-RG400 Coax ET29608

**URL:** https://www.ebeestock.com/n-male-to-tnc-female-bulkhead-cable-12-inch-length-using-rg400-coax-0029604

The information contained in this document is accurate to the best of our knowledge and representative of the part described herein. It may be necessary to make modifications to the part and/or the documentation of the part, in order to implement improvements. Ebeestock reserves the right to make such changes as required. Unless otherwise stated, all specifications are nominal. Ebeestock does not make any representation or warranty regarding the suitability of the part described herein for any particular purpose, and Ebeestock does not assume any liability arising out of the use of any part or documentation.

8th Floor, Building 1, Yongfu Science and Technology Center Industrial Park,
Nanzha District 5, Humen,523900, Dongguan, Guangdong, China.

Webstie:www.ebeestock.com Email:sales@ebeestock.com

© 2022 Ebeestock Enterprises All Rights Reserved

© 2022 Ebeestock Enterprises All Rights Reserved

www.ebeestock.com

| REVISIONS | | | |
|---|---|---|---|
| REV. | DESCRIPTION | DATE | APPROVED |
| A | INITIAL RELEASE | 8/20/2020 | S.ELLIS |

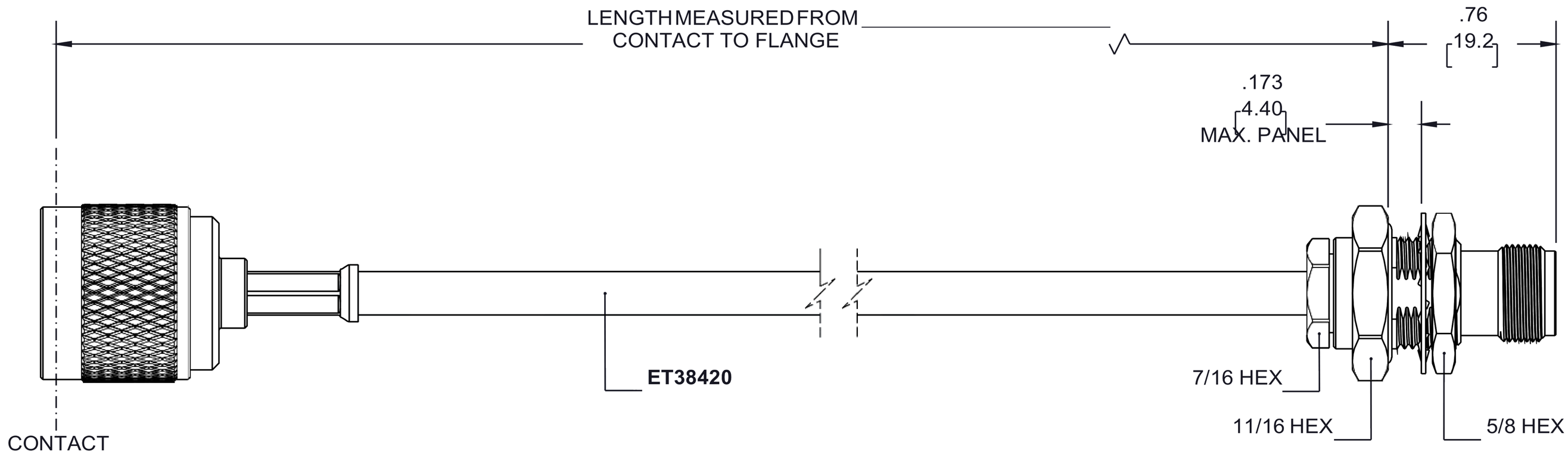


**N MALE**

**TNC FEMALE BULKHEAD**

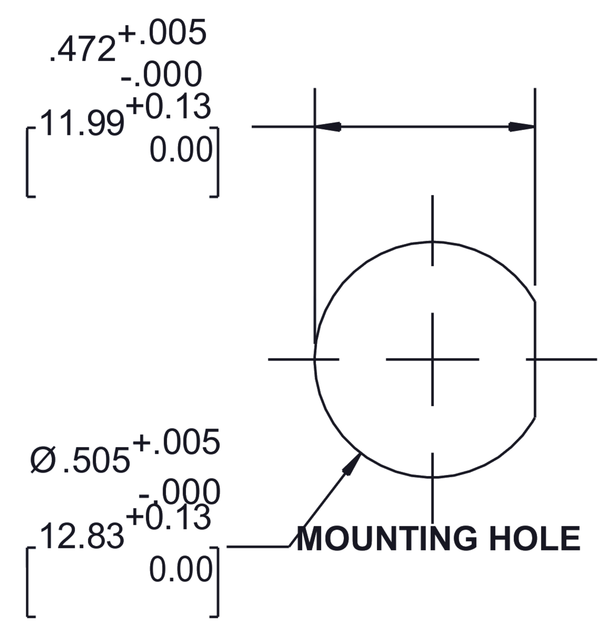


UNLESS OTHERWISE SPECIFIED
LEADING DIMENSIONS ARE INCHES
DIMENSIONS IN [ ] ARE MILLIMETERS

TOLERANCES:

| | | |
|---|---|---|
| .X = ±.2 | [5.08] | FRACTIONS |
| .XX = ± .02 | [ .51 ] | ± 1/32 |
| .XXX = ±.005 | [ .13 ] | ANGLES ± 1° |

CABLE LENGTH (L) TOLERANCES:

L ≤ 12 [305] = +1 [25] / -0
12 [305] < L ≤ 60 [1524] = +2 [51] / -0
60 [1524] < L ≤ 120 [3048] = +4 [102] / -0
120 [3048] < L ≤ 300 [7620] = +6 [152] / -0
300 [7620] < L = +5%L / -0

ALL DIMENSIONS SHOWN
ARE FOR REFERENCE ONLY.

ebeestock
Ebeestock.com
8th Floor, Building 1, Yongfu Science
and Technology Center Industrial Park,
Nanzha District 5, Humen,523900, Dongguan, Guangdong, China.
**Webstie:** www.ebeestock.com **Email:** sales@ebeestock.com

THIRD-ANGLE PROJECTION

THE INFORMATION AND DESIGN IN THIS DOCUMENT IS THE PROPERTY OF Ebeestock CORPORATION ALL RIGHTS RESERVED.

SHEET 1 OF 1

SCALE N/A

| SIZE | CAGE CODE | DRAWN BY | ITEM NO. | REV |
|---|---|---|---|---|
| A | 53919 | K.DANG | ET3W07264 | A |

THESE COMMODITIES, TECHNOLOGY OR SOFTWARE WERE EXPORTED FROM THE UNITED STATES IN ACCORDANCE WITH THE EXPORT ADMINISTRATION REGULATIONS. DIVERSION CONTRARY TO U.S. LAW PROHIBITED.