N Female 4 Hole Flange to N Male Right Angle Cable 50 cm Length Using ET-RG402 Coax

RF Cable Assemblies Technical Data Sheet ET29618

Configuration

- Connector 1: N Female 4 Hole Flange
- Connector 2: N Male Right Angle
- Cable Type: ET-RG402

Features

- Max Frequency 1 GHz
- 69.5% Phase Velocity

Applications

- General Purpose
- Laboratory Use

Description

Ebeestock's ET29618 type N female 4 hole flange to type N male right angle 50 cm cable using ET-RG402 coax is part of our full line of RF components available for same-day shipping. Ebeestock's semi-rigid RF cable assemblies are ideal for high performance applications and can be formed, using proper tooling, to the routing pattern required. This Ebeestock type N to type N cable assembly has a female to male gender configuration with 50 ohm semi-rigid ET-RG402 coax. The ET3W07619-50CM type N female to type N male cable assembly operates to 1 GHz. The right angle type N interface on the ET-RG402 cable allows for easier connections in tight spaces. Our RF cable assembly with type N 4 hole flange interface allows designers to create external connections on their product enclosures, and can be used in a variety of other rack mount and panel mount applications.

Custom versions of most RF cable assemblies can be built and shipped same day. Custom cable assembly lengths can be obtained by specifying the desired length on the web site at time of order or by contacting a sales representative. Other available RF cable assembly value added services include connector orientation or clocking, heat shrink booting and custom labeling. RF testing can also be performed to document the electrical performance of your cable assembly.

Electrical Specifications

Description	Minimum	Typical	Maximum	Units
Frequency Range	DC		1,000	MHz
VSWR			1.45:1	
Velocity of Propagation		69.5		%

Specifications by Frequency

Description	F1	F2	F3	F4	F5	Units
Frequency	500	1,000				MHz
Insertion Loss (Max.)	0.42	0.48				dB

Click the following link (or enter part number in "SEARCH" on website) to obtain additional part information including price, inventory and certifications: N Female 4 Hole Flange to N Male Right Angle Cable 50 cm Length Using ET-RG402 Coax ET29618

8th Floor, Building 1, Yongfu Science and Technology Center Industrial Park,
Nanzha District 5, Humen,523900, Dongguan, Guangdong, China.

Webstie:www.ebeestock.com Email:sales@ebeestock.com

© 2022 Ebeestock Enterprises All Rights Reserved

N Female 4 Hole Flange to N Male Right Angle Cable 50 cm Length Using ET-RG402 Coax

RF Cable Assemblies Technical Data Sheet ET29618

Electrical Specification Notes:
The Insertion Loss data above is based on the performance specifications of the coax used in this assembly. Insertion Loss is estimated as 0.1 dB for the N Female connector and 0.2 dB for the N Male connector.

Mechanical Specifications

Cable Assembly

Length*	19.68 in [499.87 mm]
Diameter	1 in [25.4 mm]

Cable

Cable Type	ET-RG402
Impedance	50 Ohms
Inner Conductor Type	Solid
Inner Conductor Material and Plating	Copper Clad Steel, Silver
Dielectric Type	PTFE
Number of Shields	1
Outer Conductor Material and Plating	Copper
Repeated Minimum Bend Radius	0.25 in [6.35 mm]

Connectors

Description	Connector 1	Connector 2
Type	N Female 4 Hole Flange	N Male Right Angle
Specification	MIL-STD-348A	MIL-STD-348
Impedance	50 Ohms	50 Ohms
Contact Material and Plating	Brass, Gold	Brass, Gold over Nickel
Contact Plating Specification	30µ in. minimum	MIL-G-45204
Dielectric Type	PTFE	PTFE
Body Material and Plating	Brass, Nickel	Brass, Gold over Nickel
Body Plating Specification	100µ in. minimum	MIL-G-45204
Coupling Nut Material and Plating	Brass, Nickel	Brass, Nickel
Coupling Nut Plating Specification	100µ in. minimum	QQ-N-290

Environmental Specifications

Temperature

Operating Range	-55 to +125 deg C

Click the following link (or enter part number in “SEARCH” on website) to obtain additional part information including price, inventory and certifications: N Female 4 Hole Flange to N Male Right Angle Cable 50 cm Length Using ET-RG402 Coax ET29618

8th Floor, Building 1, Yongfu Science and Technology Center Industrial Park,
Nanzha District 5, Humen,523900, Dongguan, Guangdong, China.

Webstie:www.ebeestock.com Email:sales@ebeestock.com

© 2022 Ebeestock Enterprises All Rights Reserved

N Female 4 Hole Flange to N Male Right Angle Cable 50 cm Length Using ET-RG402 Coax

RF Cable Assemblies Technical Data Sheet ET29618

Compliance Certifications (see product page for current document)

Plotted and Other Data

Notes:

How to Order

Part Number Configuration: **ET3W07619 - xx uu**

- uu — Unit of Measure: cm = Centimeters; <blank> = Inches
- xx — Length
- ET3W07619 — Base Number

Example: ET3W07619-12 = 12 inches long cable
ET3W07619-100cm = 100 cm long cable

N Female 4 Hole Flange to N Male Right Angle Cable 50 cm Length Using ET-RG402 Coax from Ebeestock Enterprises has same day shipment for domestic and International orders. Our RF, microwave and millimeter wave products maintain a 99.4% availability and are part of the broadest selection in the industry.

Click the following link (or enter part number in “SEARCH” on website) to obtain additional part information including price, inventory and certifications: N Female 4 Hole Flange to N Male Right Angle Cable 50 cm Length Using ET-RG402 Coax ET29618

URL: https://www.ebeestock.com/n-female-4-hole-flange-to-n-male-right-angle-cable-12-inch-length-using-rg402-coax-0029613

The information contained in this document is accurate to the best of our knowledge and representative of the part described herein. It may be necessary to make modifications to the part and/or the documentation of the part, in order to implement improvements. Ebeestock reserves the right to make such changes as required. Unless otherwise stated, all specifications are nominal. Ebeestock does not make any representation or warranty regarding the suitability of the part described herein for any particular purpose, and Ebeestock does not assume any liability arising out of the use of any part or documentation.

8th Floor, Building 1, Yongfu Science and Technology Center Industrial Park,
Nanzha District 5, Humen,523900, Dongguan, Guangdong, China.

Webstie:www.ebeestock.com Email:sales@ebeestock.com

© 2022 Ebeestock Enterprises All Rights Reserved

© 2022 Ebeestock Enterprises All Rights Reserved

www.ebeestock.com

REVISIONS			
REV.	DESCRIPTION	DATE	APPROVED
A	INITIAL RELEASE	8/20/2020	S.ELLIS

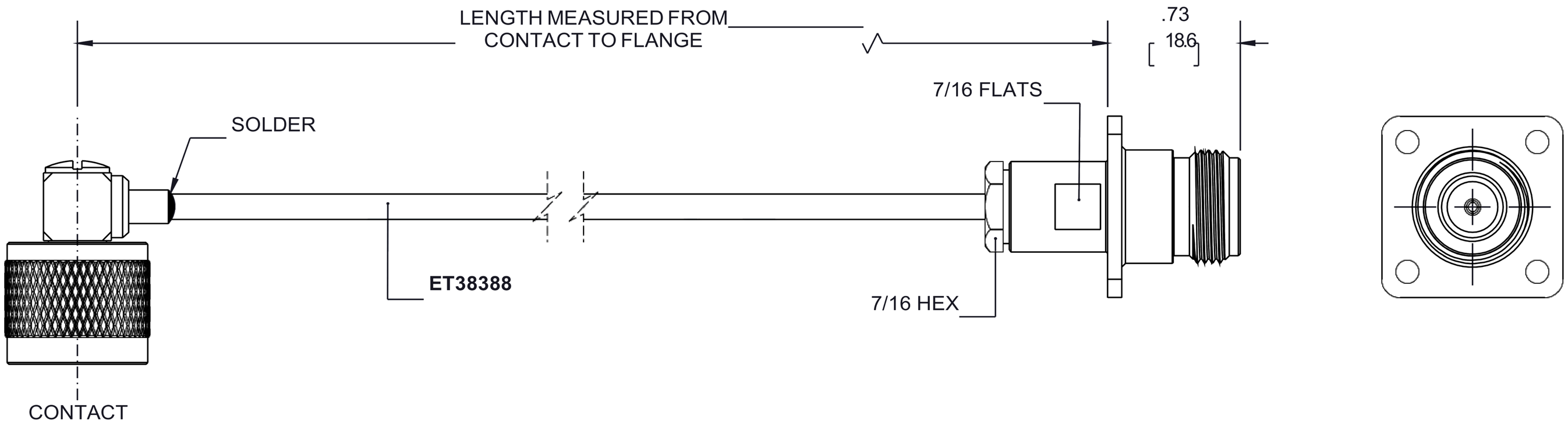

N MALE
RA

N FEMALE
4 HOLE FLANGE

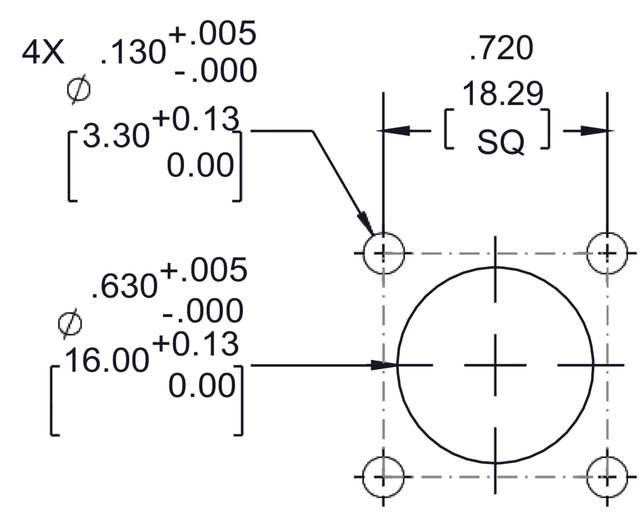

PATTERN
MOUNTING HOLE

UNLESS OTHERWISE SPECIFIED
LEADING DIMENSIONS ARE INCHES
DIMENSIONS IN [ ] ARE MILLIMETERS

TOLERANCES:

.X = ±.2	[5.08]	FRACTIONS
.XX = ± .02	[.51]	± 1/32
.XXX = ±.005	[.13]	ANGLES ± 1°

CABLE LENGTH (L) TOLERANCES:

L ≤ 12 [305] = +1 [25] / -0
12 [305] < L ≤ 60 [1524] = +2 [51] / -0
60 [1524] < L ≤ 120 [3048] = +4 [102] / -0
120 [3048] < L ≤ 300 [7620] = +6 [152] / -0
300 [7620] < L = +5%L / -0

ALL DIMENSIONS SHOWN
ARE FOR REFERENCE ONLY.

ebeestock
Ebeestock.com
8th Floor, Building 1, Yongfu Science
and Technology Center Industrial Park,
Nanzha District 5, Humen,523900, Dongguan, Guangdong, China.
Webstie: www.ebeestock.com **Email:** sales@ebeestock.com

THIRD-ANGLE PROJECTION

THE INFORMATION AND
DESIGN IN THIS DOCUMENT
IS THE PROPERTY OF
Ebeestock CORPORATION ALL
RIGHTS RESERVED.

SHEET 1 OF 1

SCALE N/A

SIZE	CAGE CODE	DRAWN BY	ITEM NO.	REV
A	53919	K.DANG	ET3W07619	A

THESE COMMODITIES, TECHNOLOGY OR SOFTWARE WERE EXPORTED FROM THE UNITED STATES IN ACCORDANCE
WITH THE EXPORT ADMINISTRATION REGULATIONS. DIVERSION CONTRARY TO U.S. LAW PROHIBITED.