SMA Male to N Male Cable 12 Inch Length Using ET38343 Coax w ith HeatShrink, LF Solder

RF Cable Assemblies Technical Data Sheet ET29644

Configuration

- Connector 1: SMA Male
- Connector 2: N Male
- Cable Type: ET38343

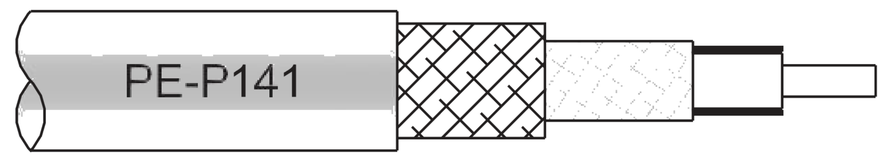

Features

- Max Frequency 18 GHz
- Shielding Effectivity > 110 dB
- 70% Phase Velocity
- Double Shielded
- FEP Jacket
- 160 series, ET38343 Spiral Strip flexible coax

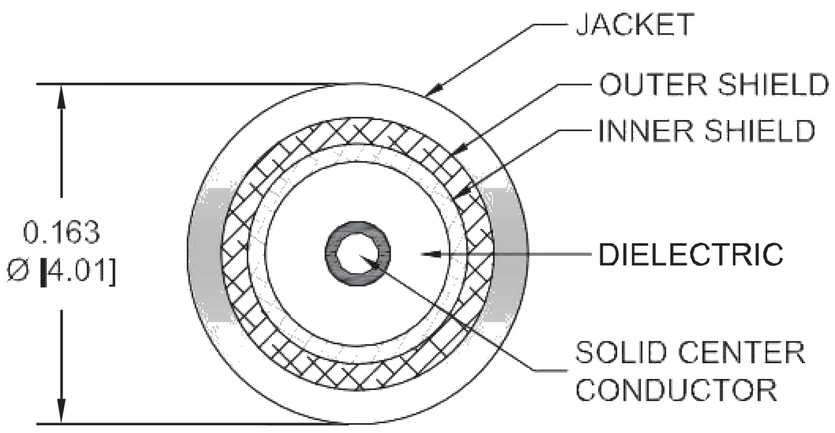

Applications

- General Purpose
- Laboratory Use

Description

Ebeestock's ET29644 SMA male to type N male 12 inch cable using ET38343 coax is part of our full line of RF components available for same-day shipping. Ebeestock's flexible RF cable assemblies are ideal for applications where tight bends and flexure are required. This Ebeestock SMA to type N cable assembly has a male to male gender configuration with 50 ohm flexible ET38343 coax. The ET29644 SMA male to type N male cable assembly operates to 18 GHz. The double shielding of this Ebeestock cable assembly provides excellent shielding effectiveness of better than 110 dB.

Custom versions of most RF cable assemblies can be built and shipped same day. Custom cable assembly lengths can be obtained by specifying the desired length on the web site at time of order or by contacting a sales representative. Other available RF cable assembly value added services include connector orientation or clocking, heat shrink booting and custom labeling. RF testing can also be performed to document the electrical performance of your cable assembly.

Click the following link (or enter part number in "SEARCH" on website) to obtain additional part information including price, inventory and certifications: SMA Male to N Male Cable 12 Inch Length Using ET38343 Coax with HeatShrink, LF Solder ET29644

8th Floor, Building 1, Yongfu Science and Technology Center Industrial Park,
Nanzha District 5, Humen,523900, Dongguan, Guangdong, China.

Webstie:www.ebeestock.com Email:sales@ebeestock.com

© 2022 Ebeestock Enterprises All Rights Reserved

SMA Male to N Male Cable 12 Inch Length Using ET38343 Coax w ith HeatShrink, LF Solder

RF Cable Assemblies Technical Data Sheet ET29644

Electrical Specifications

Description	Minimum	Typical	Maximum	Units
Frequency Range	DC		18	GHz
VSWR			1.35:1	
Velocity of Propagation		70		%
RF Shielding	110			dB
Capacitance		29.4 [96.46]		pF/ft [pF/m]

Specifications by Frequency

Description	F1	F2	F3	F4	F5	Units
Frequency	1	3	5	10	18	GHz
Insertion Loss (Typ.)	0.11	0.2	0.26	0.4	0.58	dB

Electrical Specification Notes:
Insertion loss does not include the loss of the connectors.
Insertion loss is estimated as 0.05 x sqrt(fGHz) dB per connector.
Short lengths up to 12” long may exhibit VSWR measurements up to 9% higher.
Amplitude variation not to exceed 10% in a coiled vs uncoiled, a coil is defined as a 4% loop.

Mechanical Specifications

Cable Assembly

Length*	12 in [304.8 mm]
Weight	0.153 lbs [69.4 g]

Cable

Cable Type	ET38343
Impedance	50 Ohms
Inner Conductor Type	Solid
Inner Conductor Material and Plating	Copper Clad Steel, Silver
Dielectric Type	PTFE
Number of Shields	2
Shield Layer 1	Silver Plated Copper Tape
Shield Layer 2	Silver Plated Copper Braid
Jacket Material	FEP, Blue
Jacket Diameter	0.163 in [4.14 mm]
Repeated Minimum Bend Radius	0.82 in [20.83 mm]

Click the following link (or enter part number in “SEARCH” on website) to obtain additional part information including price, inventory and certifications: SMA Male to N Male Cable 12 Inch Length Using ET38343 Coax with HeatShrink, LF Solder ET29644

8th Floor, Building 1, Yongfu Science and Technology Center Industrial Park,
Nanzha District 5, Humen,523900, Dongguan, Guangdong, China.

Webstie:www.ebeestock.com Email:sales@ebeestock.com

© 2022 Ebeestock Enterprises All Rights Reserved

SMA Male to N Male Cable 12 Inch Length Using ET38343 Coax w ith HeatShrink, LF Solder

RF Cable Assemblies Technical Data Sheet ET29644

Connectors

Description	Connector 1	Connector 2
Type	SMA Male	N Male
Impedance	50 Ohms	50 Ohms
Contact Material and Plating	Gold	Gold
Dielectric Type	PTFE	PTFE
Body Material and Plating	Passivated Stainless Steel	Passivated Stainless Steel
Coupling Nut Material and Plating	Passivated Stainless Steel	Passivated Stainless Steel
Hex Size	5/16 inch	13/16 inch
Torque	8 in-lbs [0.9 Nm]	15 in-lbs [1.7 Nm]

Mechanical Specification Notes:
*All cable assemblies have a length tolerance of 1.5% or ± 3/8”, whichever is greater.

Compliance Certifications (see product page for current document)

Plotted and Other Data

Notes:

- Values at 25°C, sea level.

Click the following link (or enter part number in “SEARCH” on website) to obtain additional part information including price, inventory and certifications: SMA Male to N Male Cable 12 Inch Length Using ET38343 Coax with HeatShrink, LF Solder ET29644

8th Floor, Building 1, Yongfu Science and Technology Center Industrial Park,
Nanzha District 5, Humen,523900, Dongguan, Guangdong, China.

Webstie:www.ebeestock.com Email:sales@ebeestock.com

© 2022 Ebeestock Enterprises All Rights Reserved

SMA Male to N Male Cable 12 Inch Length Using ET38343 Coax w ith HeatShrink, LF Solder

RF Cable Assemblies Technical Data Sheet ET29644

How to Order

Part Number Configuration:

ET304 - xx uu

- uu — Unit of Measure:
  - cm = Centimeters
  - <blank> = Inches
- xx — Length
- ET304 — Base Number

Example: ET29644 = 12 inches long cable
ET304-100cm = 100 cm long cable

SMA Male to N Male Cable 12 Inch Length Using ET38343 Coax with HeatShrink, LF Solder from Ebeestock Enterprises has same day shipment for domestic and International orders. Our RF, microwave and millimeter wave products maintain a 99.4% availability and are part of the broadest selection in the industry.

Click the following link (or enter part number in “SEARCH” on website) to obtain additional part information including price, inventory and certifications: SMA Male to N Male Cable 12 Inch Length Using ET38343 Coax with HeatShrink, LF Solder ET29644

URL: https://www.ebeestock.com/sma-male-to-n-male-cable-12-inch-length-using-pe-p141-coax-with-heatshrink-lf-solder-0029644

The information contained in this document is accurate to the best of our knowledge and representative of the part described herein. It may be necessary to make modifications to the part and/or the documentation of the part, in order to implement improvements. Ebeestock reserves the right to make such changes as required. Unless otherwise stated, all specifications are nominal. Ebeestock does not make any representation or warranty regarding the suitability of the part described herein for any particular purpose, and Ebeestock does not assume any liability arising out of the use of any part or documentation.

8th Floor, Building 1, Yongfu Science and Technology Center Industrial Park,
Nanzha District 5, Humen,523900, Dongguan, Guangdong, China.

Webstie:www.ebeestock.com Email:sales@ebeestock.com

© 2022 Ebeestock Enterprises All Rights Reserved

ET29644 CAD Drawing

SMA Male to N Male Cable 12 Inch Length Using ET-P141 Coax with HeatShrink, LF Solder

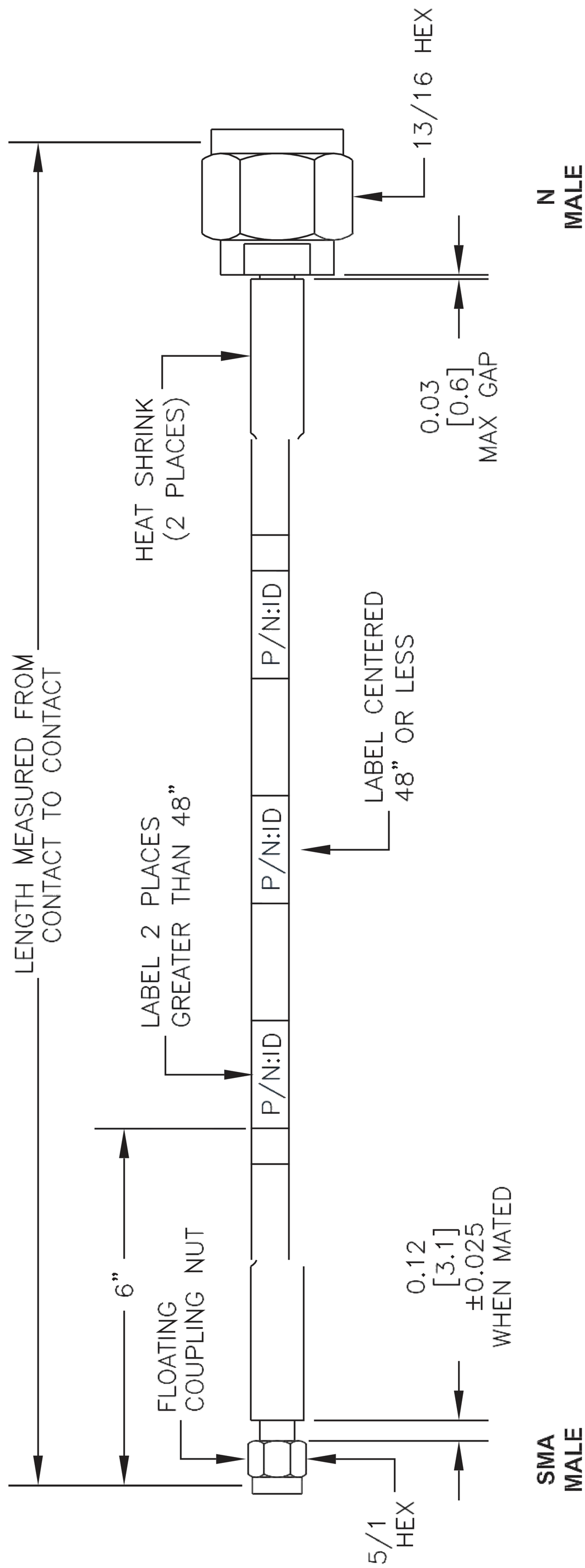

TOLERANCES
±0.2
±0.1
±

*STANDARD TOLERANCES APPLY ONLY TO DIMENSIONS IN INCHES

NOTES:
1. UNLESS OTHERWISE SPECIFIED ALL DIMENSIONS ARE NOMINAL.
2. ALL SPECIFICATIONS ARE SUBJECT TO CHANGE WITHOUT NOTICE AT ANY TIME.
3. DIMENSIONS ARE IN INCHES [mm].

DWG TITLE
PE 04

FSCM NO. 53919

CAD FILE 110816

SCALE N/A

SIZE A

41742

ebeestock
Ebeestock.com
8th Floor, Building 1, Yongfu Science and Technology Center Industrial Park, Nanzha District 5, Humen,523900, Dongguan, Guangdong, China.
Webstie: www.ebeestock.com Email: sales@ebeestock.com

© 2022 Ebeestock Enterprises All Rights Reserved