SMA Male to N Female Bulkhead Cable 72 Inch Length Using ET-RG223 Coax

RF Cable Assemblies Technical Data Sheet ET29663

Configuration

- Connector 1: SMA Male
- Connector 2: N Female Bulkhead
- Cable Type: ET-RG223

Electrical Specifications

Description	Minimum	Typical	Maximum	Units
Frequency Range	DC		6	GHz
VSWR			1.4:1	
Velocity of Propagation		66		%
Capacitance		30.8 [101.05]		pF/ft [pF/m]
Operating Voltage (AC)			500	Vrms

Specifications by Frequency

Description	F1	F2	F3	F4	F5	Units
Frequency	0.5	1	2.5	5	6	GHz
Insertion Loss (Typ.)	0.744	1.004	1.517	2.21	3.446	dB
VSWR (Max.)	1.4:1	1.4:1	1.4:1	1.4:1		
Return Loss (Max.)	15.56	15.563	15.563	15.563		dB

Mechanical Specifications

Cable Assembly

Length*	72 in [182.88 cm]
Diameter	0.827 in [21.01 mm]
Weight	0.341 lbs [154.67 g]

Cable

Cable Type	ET-RG223
Impedance	50 Ohms
Inner Conductor Type	Solid
Inner Conductor Material and Plating	Copper, Silver
Dielectric Type	PE
Number of Shields	2

Click the following link (or enter part number in “SEARCH” on website) to obtain additional part information including price, inventory and certifications: SMA Male to N Female Bulkhead Cable 72 Inch Length Using ET-RG223 Coax ET29663

8th Floor, Building 1, Yongfu Science and Technology Center Industrial Park,
Nanzha District 5, Humen,523900, Dongguan, Guangdong, China.

Webstie:www.ebeestock.com Email:sales@ebeestock.com

© 2022 Ebeestock Enterprises All Rights Reserved

SMA Male to N Female Bulkhead Cable 72 Inch Length Using ET-RG223 Coax

RF Cable Assemblies Technical Data Sheet ET29663

Shield Layer 1	Silver Plated Copper Braid
Shield Layer 2	Silver Plated Copper Braid
Jacket Material	PVC, Black
Jacket Diameter	0.21 in [5.33 mm]
One Time Minimum Bend Radius	1 in [25.4 mm]

Connectors

Description	Connector 1	Connector 2
Type	SMA Male	N Female Bulkhead
Specification	MIL-STD-348A	MIL-STD-348A
Impedance	50 Ohms	50 Ohms
Contact Material and Plating	Brass, Gold	Brass, Gold
Contact Plating Specification	50µ in. minimum	30µ in. minimum
Dielectric Type	Teflon	Teflon
Body Material and Plating	Brass, Nickel	Brass, Nickel
Body Plating Specification	100µ in. minimum	100µ in. minimum
Hex Size	5/16 in	
Torque	5 in-lbs [0.57 Nm]	

Mechanical Specification Notes:
*All cable assemblies have a length tolerance of 1.5% or ± 3/8”, whichever is greater.

Compliance Certifications (see product page for current document)

Plotted and Other Data

Notes:

- Values at 25°C, sea level.

Click the following link (or enter part number in “SEARCH” on website) to obtain additional part information including price, inventory and certifications: SMA Male to N Female Bulkhead Cable 72 Inch Length Using ET-RG223 Coax ET29663

8th Floor, Building 1, Yongfu Science and Technology Center Industrial Park,
Nanzha District 5, Humen,523900, Dongguan, Guangdong, China.

Webstie:www.ebeestock.com Email:sales@ebeestock.com

© 2022 Ebeestock Enterprises All Rights Reserved

SMA Male to N Female Bulkhead Cable 72 Inch Length Using ET-RG223 Coax

RF Cable Assemblies Technical Data Sheet ET29663

How to Order

Part Number Configuration: **ET3193 - xx uu**

- ET3193 — Base Number
- xx — Length
- uu — Unit of Measure:
  - cm = Centimeters
  - <blank> = Inches

Example: ET3193-12 = 12 inches long cable
ET3193-100cm = 100 cm long cable

SMA Male to N Female Bulkhead Cable 72 Inch Length Using ET-RG223 Coax from Ebeestock Enterprises has same day shipment for domestic and International orders. Our RF, microwave and millimeter wave products maintain a 99.4% availability and are part of the broadest selection in the industry.

Click the following link (or enter part number in “SEARCH” on website) to obtain additional part information including price, inventory and certifications: SMA Male to N Female Bulkhead Cable 72 Inch Length Using ET-RG223 Coax ET29663

URL: https://www.ebeestock.com/sma-male-to-n-female-bulkhead-cable-6-inch-length-using-rg223-coax-0029656

The information contained in this document is accurate to the best of our knowledge and representative of the part described herein. It may be necessary to make modifications to the part and/or the documentation of the part, in order to implement improvements. Ebeestock reserves the right to make such changes as required. Unless otherwise stated, all specifications are nominal. Ebeestock does not make any representation or warranty regarding the suitability of the part described herein for any particular purpose, and Ebeestock does not assume any liability arising out of the use of any part or documentation.

8th Floor, Building 1, Yongfu Science and Technology Center Industrial Park,
Nanzha District 5, Humen,523900, Dongguan, Guangdong, China.

Webstie:www.ebeestock.com Email:sales@ebeestock.com

© 2022 Ebeestock Enterprises All Rights Reserved

ET29663 CAD Drawing

SMA Male to N Female Bulkhead Cable 72 Inch Length Using ET-RG223 Coax

Standard Lengths	
-12	12"
-24	24"
-36	36"
-48	48"
-60	60"
-XXX	Custom Length in Inches

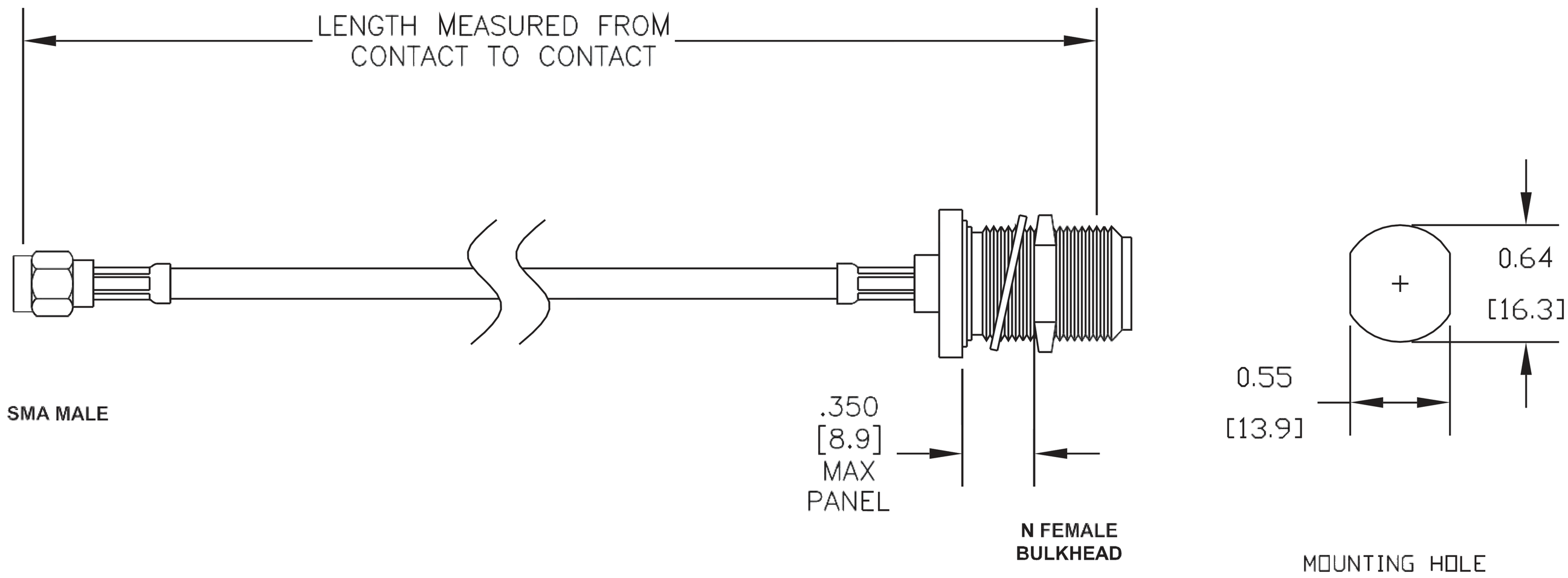

ebeestock
Ebeestock.com
8th Floor, Building 1, Yongfu Science
and Technology Center Industrial Park,
Nanzha District 5, Humen,523900, Dongguan, Guangdong, China.
Webstie: www.ebeestock.com **Email:** sales@ebeestock.com

DWG TITLE

PE3193-XX

NOTES:
1. UNLESS OTHERWISE SPECIFIED ALL DIMENSIONS ARE NOMINAL.
2. ALL SPECIFICATIONS ARE SUBJECT TO CHANGE WITHOUT NOTICE AT ANY TIME.
3. DIMENSIONS ARE IN INCHES [mm].
4. LENGTH TOLERANCE IS ± 1.5% OR 3/8", WHICHEVER IS GREATER.

REV. -	FSCM NO. 53919	CAD FILE 022807	SCALE N/A	SIZE A	127

© 2022 Ebeestock Enterprises All Rights Reserved

© 2022 Ebeestock Enterprises All Rights Reserved