Plenum QMA Male to SMA Female Low PIM Cable 60 Inch Length U sing ET38365 Coax , LF Solder

RF Cable Assemblies Technical Data Sheet

ET29712

Configuration

- Connector 1: QMA Male
- Connector 2: SMA Female
- Cable Type: ET38365

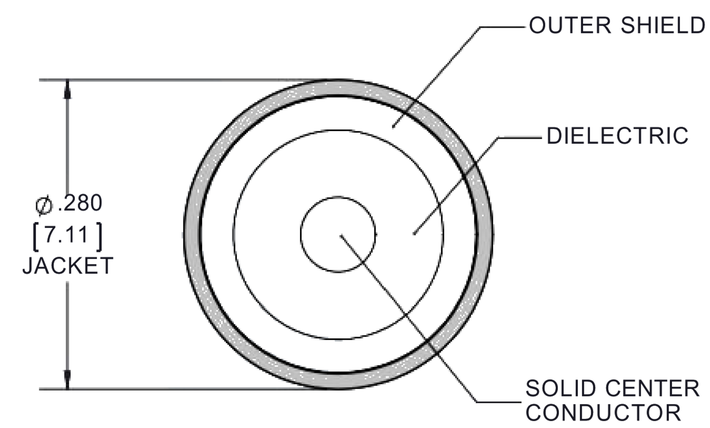

Features

- Max Frequency 5.8 GHz
- Low PIM: -150 dBc Max
- Shielding Effectivity > 100 dB
- 76% Phase Velocity
- FEP Jacket
- 100% Tested with PIM Test Results Marked on Cable
- UL910 Plenum Rated Cable
- Lightweight and Extremely Flexible
- Low Loss with Excellent VSWR
- IP67 (when mated)

Applications

- General Purpose
- Laboratory Use
- Low PIM Applications
- Distributed Antenna Systems (DAS)
- Plenum Installations
- Multi-Carrier Communication Systems
- PIM Testing

Description

Ebeestock's ET29712 QMA male to SMA female 60 inch cable using ET38365 coax is part of our full line of RF components available for same-day shipping. Ebeestock's corrugated RF cable assemblies are ideal for applications where durability and high power are needed. This Ebeestock QMA to SMA cable assembly has a male to female gender configura- tion with 50 ohm corrugated ET38365 coax. The ET29712 QMA male to SMA female cable assembly operates to 5.8 GHz. Our low PIM design also offers excellent passive intermodulation performance with PIM levels better than -150 dBc.

Custom versions of most RF cable assemblies can be built and shipped same day. Custom cable assembly lengths can be obtained by specifying the desired length on the web site at time of order or by contacting a sales representative. Other avail- able RF cable assembly value added services include connector orientation or clocking, heat shrink booting and custom label- ing. RF testing can also be performed to document the electrical performance of your cable assembly.

Click the following link (or enter part number in "SEARCH" on website) to obtain additional part information including price, inventory and certifications: Plenum QMA Male to SMA Female Low PIM Cable 60 Inch Length Using ET38365 Coax , LF Solder ET29712

8th Floor, Building 1, Yongfu Science and Technology Center Industrial Park,
Nanzha District 5, Humen,523900, Dongguan, Guangdong, China.

Webstie:www.ebeestock.com Email:sales@ebeestock.com

© 2022 Ebeestock Enterprises All Rights Reserved

Plenum QMA Male to SMA Female Low PIM Cable 60 Inch Length U sing ET38365 Coax , LF Solder

RF Cable Assemblies Technical Data Sheet ET29712

Electrical Specifications

Description	Minimum	Typical	Maximum	Units
Frequency Range	DC		5.8	GHz
VSWR			1.4:1	
Velocity of Propagation		76		%
RF Shielding	100			dB
Passive Intermodulation			-150	dBc
Capacitance		27 [88.58]		pF/ft [pF/m]
Inductance		0.067 [0.22]		uH/ft [uH/m]
DC Resistance Inner Conductor		3 [9.84]		Ω/1000ft [Ω/Km]

Specifications by Frequency

Description	F1	F2	F3	F4	F5	Units
Frequency	0.45	0.7	1	2.5	5.8	GHz
Insertion Loss (Max.)	0.25	0.31	0.37	0.6	0.94	dB

Electrical Specification Notes:
The insertion loss data above is based on the performance specifications of the coax cable used in this assembly. The insertion loss includes an estimated insertion loss of 0.04*SQRT(FGHz) dB maximum per connector.

Mechanical Specifications

Cable Assembly

Length*	60 in [152.4 cm]

Cable

Cable Type	ET38365
Impedance	50 Ohms
Inner Conductor Type	Solid
Inner Conductor Material and Plating	Copper
Dielectric Type	PTFE
Number of Shields	1
Outer Conductor Material and Plating	Copper
Jacket Material	FEP, Blue
Jacket Diameter	0.28 in [7.11 mm]
One Time Minimum Bend Radius	1.25 in [31.75 mm]
Bending Moment	0.8 lbs-ft [1.08 N-m]

Click the following link (or enter part number in “SEARCH” on website) to obtain additional part information including price, inventory and certifications: Plenum QMA Male to SMA Female Low PIM Cable 60 Inch Length Using ET38365 Coax , LF Solder ET29712

8th Floor, Building 1, Yongfu Science and Technology Center Industrial Park,
Nanzha District 5, Humen,523900, Dongguan, Guangdong, China.

Webstie:www.ebeestock.com Email:sales@ebeestock.com

© 2022 Ebeestock Enterprises All Rights Reserved

Plenum QMA Male to SMA Female Low PIM Cable 60 Inch Length U sing ET38365 Coax , LF Solder

RF Cable Assemblies Technical Data Sheet ET29712

Connectors

Description	Connector 1	Connector 2
Type	QMA Male	SMA Female
Impedance	50 Ohms	50 Ohms
Contact Material and Plating	Brass, Silver	Beryllium Copper, Silver
Dielectric Type	PTFE	PTFE
Outer Conductor Material and Plating	Phosphor Bronze, Tri-Metal	Brass, Tri-Metal
Body Material and Plating	Brass, Tri-Metal	Brass, Tri-Metal
Coupling Nut Material and Plating	Brass, Tri-Metal	

Mechanical Specification Notes:
*All cable assemblies have a length tolerance of 1.5% or ± 3/8”, whichever is greater.

Environmental Specifications

Temperature

Operating Range -55 to +165 deg C

Compliance Certifications (see product page for current document)

Plotted and Other Data

Notes:

Click the following link (or enter part number in “SEARCH” on website) to obtain additional part information including price, inventory and certifications: Plenum QMA Male to SMA Female Low PIM Cable 60 Inch Length Using ET38365 Coax , LF Solder ET29712

8th Floor, Building 1, Yongfu Science and Technology Center Industrial Park,
Nanzha District 5, Humen,523900, Dongguan, Guangdong, China.

Webstie:www.ebeestock.com Email:sales@ebeestock.com

© 2022 Ebeestock Enterprises All Rights Reserved

Plenum QMA Male to SMA Female Low PIM Cable 60 Inch Length U
sing ET38365 Coax , LF Solder

RF Cable Assemblies Technical Data Sheet ET29712

Typical Performance Data

Click the following link (or enter part number in “SEARCH” on website) to obtain additional part information including price, inventory and certifications: Plenum QMA Male to SMA Female Low PIM Cable 60 Inch Length Using ET38365 Coax , LF Solder ET29712

8th Floor, Building 1, Yongfu Science and Technology Center Industrial Park,
Nanzha District 5, Humen,523900, Dongguan, Guangdong, China.

Webstie:www.ebeestock.com Email:sales@ebeestock.com

© 2022 Ebeestock Enterprises All Rights Reserved

Plenum QMA Male to SMA Female Low PIM Cable 60 Inch Length U
sing ET38365 Coax , LF Solder

RF Cable Assemblies Technical Data Sheet ET29712

How to Order

Part Number Configuration: **ET3C5882 - xx uu**

- ET3C5882 — Base Number
- xx — Length
- uu — Unit of Measure:
  - cm = Centimeters
  - <blank> = Inches

Example: ET3C5882-12 = 12 inches long cable
ET3C5882-100cm = 100 cm long cable

Plenum QMA Male to SMA Female Low PIM Cable 60 Inch Length Using ET38365 Coax , LF Solder from Ebeestock Enterprises has same day shipment for domestic and International orders. Our RF, microwave and millimeter wave products maintain a 99.4% availability and are part of the broadest selection in the industry.

Click the following link (or enter part number in “SEARCH” on website) to obtain additional part information including price, inventory and certifications: Plenum QMA Male to SMA Female Low PIM Cable 60 Inch Length Using ET38365 Coax , LF Solder ET29712

URL: https://www.ebeestock.com/plenum-qma-male-to-sma-female-low-pim-cable-12-inch-length-using-spp-250-llpl-coax-lf-solder-0029708

The information contained in this document is accurate to the best of our knowledge and representative of the part described herein. It may be necessary to make modifications to the part and/or the documentation of the part, in order to implement improvements. Ebeestock reserves the right to make such changes as required. Unless otherwise stated, all specifications are nominal. Ebeestock does not make any representation or warranty regarding the suitability of the part described herein for any particular purpose, and Ebeestock does not assume any liability arising out of the use of any part or documentation.

8th Floor, Building 1, Yongfu Science and Technology Center Industrial Park,
Nanzha District 5, Humen,523900, Dongguan, Guangdong, China.

Webstie:www.ebeestock.com Email:sales@ebeestock.com

© 2022 Ebeestock Enterprises All Rights Reserved

© 2022 Ebeestock Enterprises All Rights Reserved

www.ebeestock.com

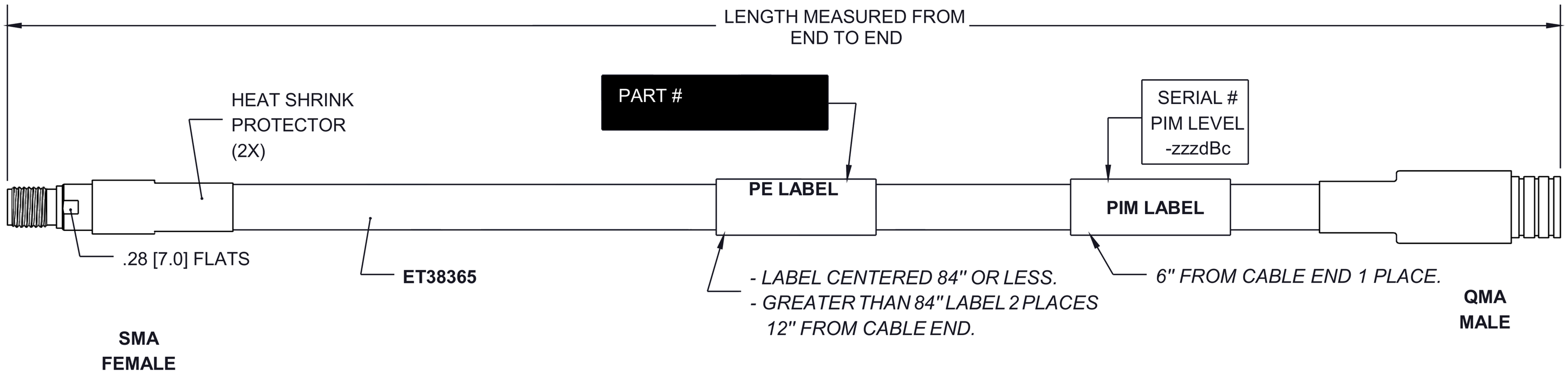

STANDARD TOLERANCES	
.X	±0.2
.XX	±0.01
.XXX	±0.005

*STANDARD TOLERANCES APPLY
ONLY TO DIMENSIONS IN INCHES

ebeestock
Ebeestock.com
8th Floor, Building 1, Yongfu Science
and Technology Center Industrial Park,
Nanzha District 5, Humen,523900, Dongguan, Guangdong, China.
Webstie: www.ebeestock.com **Email:** sales@ebeestock.com

DWG TITLE

ET3C5882

NOTES:
1. UNLESS OTHERWISE SPECIFIED ALL DIMENSIONS ARE NOMINAL.
2. ALL SPECIFICATIONS ARE SUBJECT TO CHANGE WITHOUT NOTICE AT ANY TIME
3. DIMENSIONS ARE IN INCHES [mm].

CAGE CODE 53919	CAD FILE 12/26/18	SCALE N/A	SIZE A	CN2379

© 2022 Ebeestock Enterprises All Rights Reserved