SHV Plug to SHV Plug Cable 36 Inch Length Using ET-RG58 Coax , LF Solder

RF Cable Assemblies Technical Data Sheet

ET30147

Configuration

- Connector 1: SHV Plug
- Connector 2: SHV Plug
- Cable Type: ET-RG58

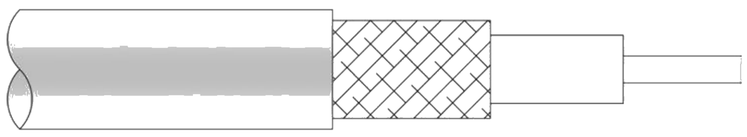

Features

- Max Frequency 300 MHz
- Shielding Effectivity > 45 dB
- 65.9% Phase Velocity
- PVC (NC) Jacket

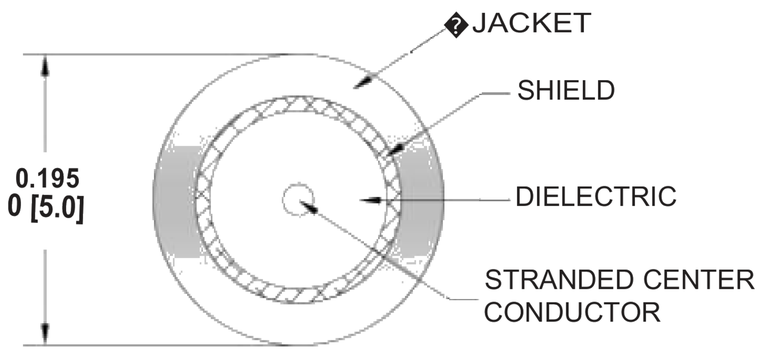

Applications

- General Purpose
- Laboratory Use

Description

Ebeestock's ET30147 SHV plug to SHV plug 36 inch cable using ET-RG58 coax is part of our full line of RF components available for same-day shipping. Ebeestock's flexible RF cable assemblies are ideal for applications where tight bends and flexure are required. This Ebeestock SHV to SHV cable assembly has a plug to plug gender configuration with 50 ohm flexible ET-RG58 coax. The ET30147 SHV plug to SHV plug cable assembly operates to 300 MHz.

Custom versions of most RF cable assemblies can be built and shipped same day. Custom cable assembly lengths can be obtained by specifying the desired length on the web site at time of order or by contacting a sales representative. Other available RF cable assembly value added services include connector orientation or clocking, heat shrink booting and custom labeling. RF testing can also be performed to document the electrical performance of your cable assembly.

Click the following link (or enter part number in "SEARCH" on website) to obtain additional part information including price, inventory and certifications: SHV Plug to SHV Plug Cable 36 Inch Length Using ET-RG58 Coax , LF Solder ET30147

8th Floor, Building 1, Yongfu Science and Technology Center Industrial Park,
Nanzha District 5, Humen,523900, Dongguan, Guangdong, China.

Webstie:www.ebeestock.com Email:sales@ebeestock.com

© 2022 Ebeestock Enterprises All Rights Reserved

SHV Plug to SHV Plug Cable 36 Inch Length Using ET-RG58 Coax , LF Solder

RF Cable Assemblies Technical Data Sheet ET30147

Electrical Specifications

Description	Minimum	Typical	Maximum	Units
Frequency Range	DC		300	MHz
VSWR			1.4:1	
Velocity of Propagation		65.9		%
RF Shielding	45			dB
Capacitance		30.8 [101.05]		pF/ft [pF/m]
Operating Voltage (AC)			1,900	Vrms

Specifications by Frequency

Description	F1	F2	F3	F4	F5	Units
Frequency	50	100	300			MHz
Insertion Loss (Typ.)	0.298	0.347	0.481			dB

Electrical Specification Notes:
The Insertion Loss data above is based on the performance specifications of the coax cable used in this assembly. The Insertion Loss includes an estimated insertion loss of 0.1 dB per connector.

Mechanical Specifications

Cable Assembly

Length*	36 in [914.4 mm]
Diameter	0.571 in [14.5 mm]
Weight	0.137 lbs [62.14 g]

Cable

Cable Type	ET-RG58
Impedance	50 Ohms
Inner Conductor Type	Stranded
Inner Conductor Material and Plating	Copper, Tin
Dielectric Type	PE
Number of Shields	1
Shield Layer 1	Tinned Copper Braid
Jacket Material	PVC (NC), Black
Jacket Diameter	0.195 in [4.95 mm]
One Time Minimum Bend Radius	2 in [50.8 mm]

Click the following link (or enter part number in “SEARCH” on website) to obtain additional part information including price, inventory and certifications: SHV Plug to SHV Plug Cable 36 Inch Length Using ET-RG58 Coax , LF Solder ET30147

8th Floor, Building 1, Yongfu Science and Technology Center Industrial Park,
Nanzha District 5, Humen,523900, Dongguan, Guangdong, China.

Webstie:www.ebeestock.com Email:sales@ebeestock.com

© 2022 Ebeestock Enterprises All Rights Reserved

SHV Plug to SHV Plug Cable 36 Inch Length Using ET-RG58 Coax , LF Solder

RF Cable Assemblies Technical Data Sheet ET30147

Connectors

Description	Connector 1	Connector 2
Type	SHV Plug	SHV Plug
Specification	MIL-STD-348A	MIL-STD-348A
Impedance	50 Ohms	50 Ohms
Contact Material and Plating	Brass, Gold	Brass, Gold
Contact Plating Specification	30µ in. minimum	30µ in. minimum
Dielectric Type	Teflon	Teflon
Body Material and Plating	Brass, Nickel	Brass, Nickel
Body Plating Specification	100µ in. minimum	100µ in. minimum
Coupling Nut Material and Plating	Brass, Nickel	Brass, Nickel
Coupling Nut Plating Specification	100µ in. minimum	100µ in. minimum

Compliance Certifications (see product page for current document)

Plotted and Other Data

Notes:

- Values at 25°C, sea level.

Click the following link (or enter part number in “SEARCH” on website) to obtain additional part information including price, inventory and certifications: SHV Plug to SHV Plug Cable 36 Inch Length Using ET-RG58 Coax , LF Solder ET30147

8th Floor, Building 1, Yongfu Science and Technology Center Industrial Park,
Nanzha District 5, Humen,523900, Dongguan, Guangdong, China.

Webstie:www.ebeestock.com Email:sales@ebeestock.com

© 2022 Ebeestock Enterprises All Rights Reserved

SHV Plug to SHV Plug Cable 36 Inch Length Using ET-RG58 Coax , LF Solder

RF Cable Assemblies Technical Data Sheet ET30147

How to Order

Part Number Configuration: **ET3815LF - xx uu**

- ET3815LF — Base Number
- xx — Length
- uu — Unit of Measure:
  - cm = Centimeters
  - <blank> = Inches

Example: ET3815LF-12 = 12 inches long cable
ET3815LF-100cm = 100 cm long cable

SHV Plug to SHV Plug Cable 36 Inch Length Using ET-RG58 Coax , LF Solder from Ebeestock Enterprises has same day shipment for domestic and International orders. Our RF, microwave and millimeter wave products maintain a 99.4% availability and are part of the broadest selection in the industry.

Click the following link (or enter part number in “SEARCH” on website) to obtain additional part information including price, inventory and certifications: SHV Plug to SHV Plug Cable 36 Inch Length Using ET-RG58 Coax , LF Solder ET30147

URL: https://www.ebeestock.com/shv-plug-to-shv-plug-cable-12-inch-length-using-rg58-coax-lf-solder-0030145

The information contained in this document is accurate to the best of our knowledge and representative of the part described herein. It may be necessary to make modifications to the part and/or the documentation of the part, in order to implement improvements. Ebeestock reserves the right to make such changes as required. Unless otherwise stated, all specifications are nominal. Ebeestock does not make any representation or warranty regarding the suitability of the part described herein for any particular purpose, and Ebeestock does not assume any liability arising out of the use of any part or documentation.

8th Floor, Building 1, Yongfu Science and Technology Center Industrial Park,
Nanzha District 5, Humen,523900, Dongguan, Guangdong, China.

Webstie:www.ebeestock.com Email:sales@ebeestock.com

© 2022 Ebeestock Enterprises All Rights Reserved

© 2022 Ebeestock Enterprises All Rights Reserved

www.ebeestock.com

REVISIONS			
REV.	DESCRIPTION	DATE	APPROVED
A	INITIAL RELEASE	9/15/2020	S.ELLIS

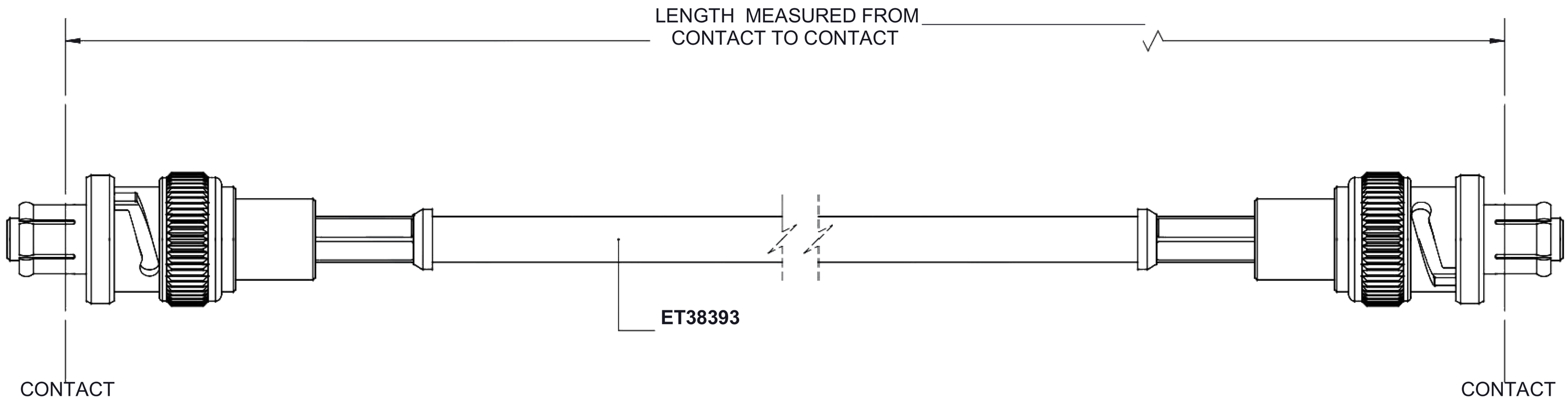

SHV PLUG

SHV PLUG

THESE COMMODITIES, TECHNOLOGY OR SOFTWARE WERE EXPORTED FROM THE UNITED STATES IN ACCORDANCE WITH THE EXPORT ADMINISTRATION REGULATIONS. DIVERSION CONTRARY TO U.S. LAW PROHIBITED.

UNLESS OTHERWISE SPECIFIED
LEADING DIMENSIONS ARE INCHES
DIMENSIONS IN [ ] ARE MILLIMETERS

TOLERANCES:

.X = ±.2 [5.08]
.XX = ± .02 [.51]
.XXX = ±.005 [.13]

FRACTIONS ± 1/32
ANGLES ± 1°

CABLE LENGTH (L) TOLERANCES:

L ≤ 12 [305] = +1 [25] / -0
12 [305] < L ≤ 60 [1524] = +2 [51] / -0
60 [1524] < L ≤ 120 [3048] = +4 [102] / -0
120 [3048] < L ≤ 300 [7620] = +6 [152] / -0
300 [7620] < L = +5%L / -0

ALL DIMENSIONS SHOWN ARE FOR REFERENCE ONLY.

ebeestock
Ebeestock.com
8th Floor, Building 1, Yongfu Science and Technology Center Industrial Park,
Nanzha District 5, Humen,523900, Dongguan, Guangdong, China.
Webstie: www.ebeestock.com **Email:** sales@ebeestock.com

THIRD-ANGLE PROJECTION

THE INFORMATION AND DESIGN IN THIS DOCUMENT IS THE PROPERTY OF Ebeestock CORPORATION ALL RIGHTS RESERVED.

SHEET 1 OF 1

SCALE N/A

SIZE	CAGE CODE	DRAWN BY	ITEM NO.	REV
A	53919	K.DANG	ET3815LF	A

T-Rev.D