SHV Plug to SHV Jack Bulkhead Cable 24 Inch Length Using ET-ET-RG142 Coax

RF Cable Assemblies Technical Data Sheet ET30188

Configuration

- Connector 1: SHV Plug
- Connector 2: SHV Jack Bulkhead
- Cable Type: ET-RG142

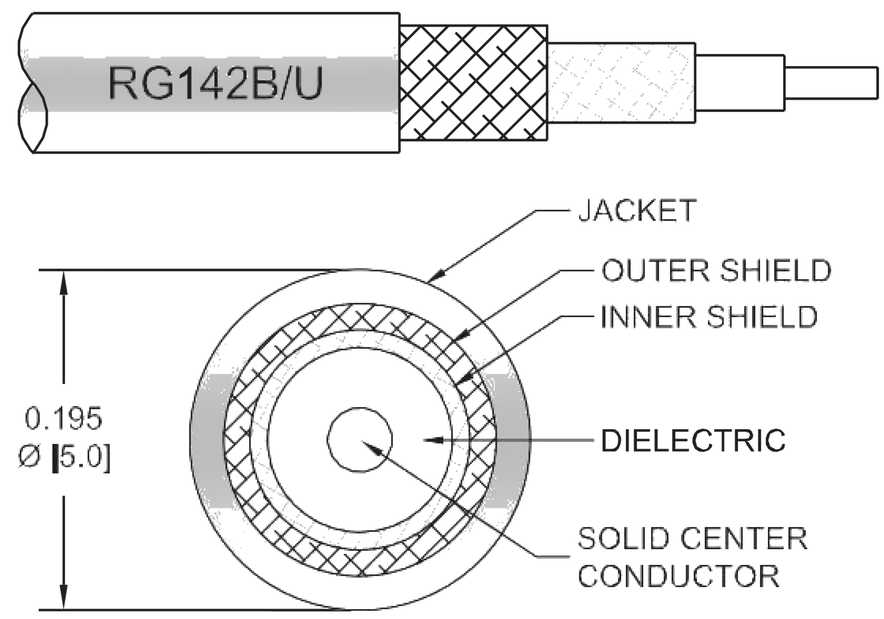

Features

- Double Shielded
- FEP Jacket

Applications

- General Purpose
- Laboratory Use

Description

Ebeestock's ET30188 SHV plug to SHV jack bulkhead 24 inch cable using ET-RG142 coax is part of our full line of RF components available for same-day shipping. Ebeestock's flexible RF cable assemblies are ideal for applications where tight bends and flexure are required. This Ebeestock SHV to SHV cable assembly has a plug to jack gender configuration with 50 ohm flexible ET-RG142 coax. Our RF cable assembly with SHV bulkhead interface allows designers to create external connec- tions on their product enclosures, and can be used in a variety of other rack mount and panel mount applications. The double shielding of this Ebeestock cable assembly provides excellent shielding effectiveness.

Custom versions of most RF cable assemblies can be built and shipped same day. Custom cable assembly lengths can be obtained by specifying the desired length on the web site at time of order or by contacting a sales representative. Other available RF cable assembly value added services include connector orientation or clocking, heat shrink booting and custom labeling. RF testing can also be performed to document the electrical performance of your cable assembly.

Mechanical Specifications

Cable Assembly

Length*	24 in [609.6 mm]
Diameter	0.687 in [17.45 mm]

Cable

Cable Type	ET-RG142
Impedance	50 Ohms
Inner Conductor Type	Solid
Inner Conductor Material and Plating	Copper Clad Steel, Silver
Dielectric Type	PTFE
Number of Shields	2

Click the following link (or enter part number in "SEARCH" on website) to obtain additional part information including price, inventory and certifications: SHV Plug to SHV Jack Bulkhead Cable 24 Inch Length Using ET-RG142 Coax ET30188

8th Floor, Building 1, Yongfu Science and Technology Center Industrial Park,
Nanzha District 5, Humen,523900, Dongguan, Guangdong, China.

Webstie:www.ebeestock.com Email:sales@ebeestock.com

© 2022 Ebeestock Enterprises All Rights Reserved

SHV Plug to SHV Jack Bulkhead Cable 24 Inch Length Using ET-ET-RG142 Coax

RF Cable Assemblies Technical Data Sheet ET30188

Shield Layer 1	Silver Plated Copper Braid
Shield Layer 2	Silver Plated Copper Braid
Jacket Material	FEP, Tan
Jacket Diameter	0.195 in [4.95 mm]
Repeated Minimum Bend Radius	1 in [25.4 mm]

Connectors

Description	Connector 1	Connector 2
Type	SHV Plug	SHV Jack Bulkhead
Specification	MIL-STD-348A	MIL-STD-348
Impedance	50 Ohms	50 Ohms
Contact Material and Plating	Brass, Gold	Brass, Silver
Contact Plating Specification	30 µin minimum	ASTM-B700
Dielectric Type	PTFE	PTFE
Body Material and Plating	Brass, Nickel	Brass, Nickel
Body Plating Specification	100 µin minimum	ASTM-B689
Coupling Nut Material and Plating	Brass, Nickel	
Coupling Nut Plating Specification	100 µin minimum	

Mechanical Specification Notes:
*All cable assemblies have a length tolerance of 1.5% or ± 3/8”, whichever is greater.

Environmental Specifications

Temperature

Operating Range -55 to +165 deg C

Compliance Certifications (see product page for current document)

Plotted and Other Data

Notes:

Click the following link (or enter part number in “SEARCH” on website) to obtain additional part information including price, inventory and certifications: SHV Plug to SHV Jack Bulkhead Cable 24 Inch Length Using ET-RG142 Coax ET30188

8th Floor, Building 1, Yongfu Science and Technology Center Industrial Park,
Nanzha District 5, Humen,523900, Dongguan, Guangdong, China.

Webstie:www.ebeestock.com Email:sales@ebeestock.com

© 2022 Ebeestock Enterprises All Rights Reserved

SHV Plug to SHV Jack Bulkhead Cable 24 Inch Length Using ET-
ET-RG142 Coax

RF Cable Assemblies Technical Data Sheet ET30188

How to Order

Part Number Configuration: **ET3W03078 - xx uu**

- ET3W03078 — Base Number
- xx — Length
- uu — Unit of Measure:
  - cm = Centimeters
  - <blank> = Inches

Example: ET3W03078-12 = 12 inches long cable
ET3W03078-100cm = 100 cm long cable

SHV Plug to SHV Jack Bulkhead Cable 24 Inch Length Using ET-RG142 Coax from Ebeestock Enterprises has same day shipment for domestic and International orders. Our RF, microwave and millimeter wave products maintain a 99.4% availability and are part of the broadest selection in the industry.

Click the following link (or enter part number in “SEARCH” on website) to obtain additional part information including price, inventory and certifications: SHV Plug to SHV Jack Bulkhead Cable 24 Inch Length Using ET-RG142 Coax ET30188

URL: https://www.ebeestock.com/shv-plug-to-shv-jack-bulkhead-cable-12-inch-length-using-rg142-coax-0030187

The information contained in this document is accurate to the best of our knowledge and representative of the part described herein. It may be necessary to make modifications to the part and/or the documentation of the part, in order to implement improvements. Ebeestock reserves the right to make such changes as required. Unless otherwise stated, all specifications are nominal. Ebeestock does not make any representation or warranty regarding the suitability of the part described herein for any particular purpose, and Ebeestock does not assume any liability arising out of the use of any part or documentation.

8th Floor, Building 1, Yongfu Science and Technology Center Industrial Park,
Nanzha District 5, Humen,523900, Dongguan, Guangdong, China.

Webstie:www.ebeestock.com Email:sales@ebeestock.com

© 2022 Ebeestock Enterprises All Rights Reserved

© 2022 Ebeestock Enterprises All Rights Reserved

www.ebeestock.com

REVISIONS			
REV.	DESCRIPTION	DATE	APPROVED
A	INITIAL RELEASE	04/23/19	S.ELLIS

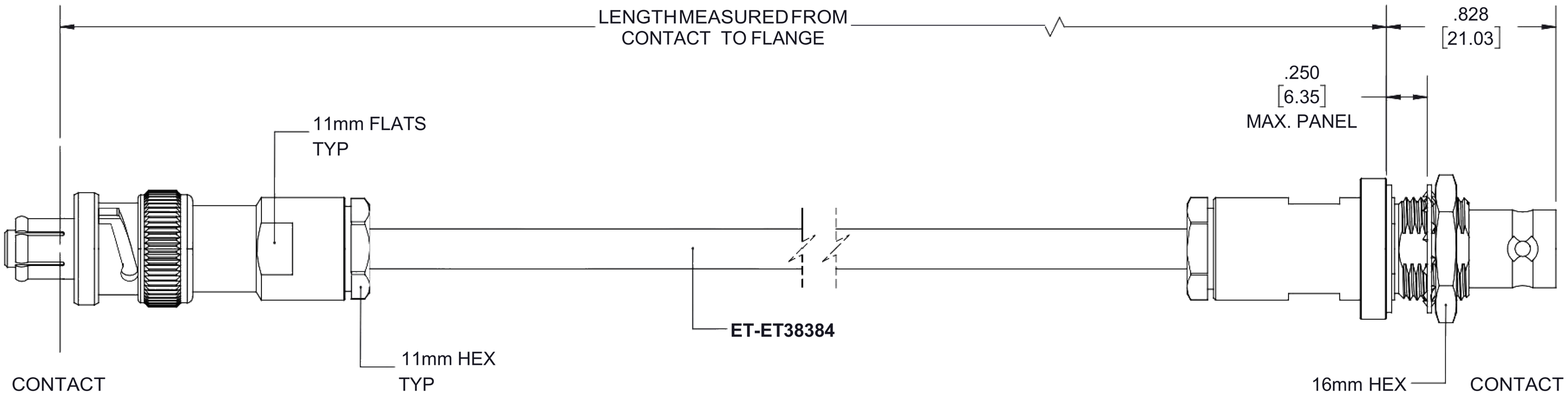

SHV PLUG

SHV JACK BULKHEAD

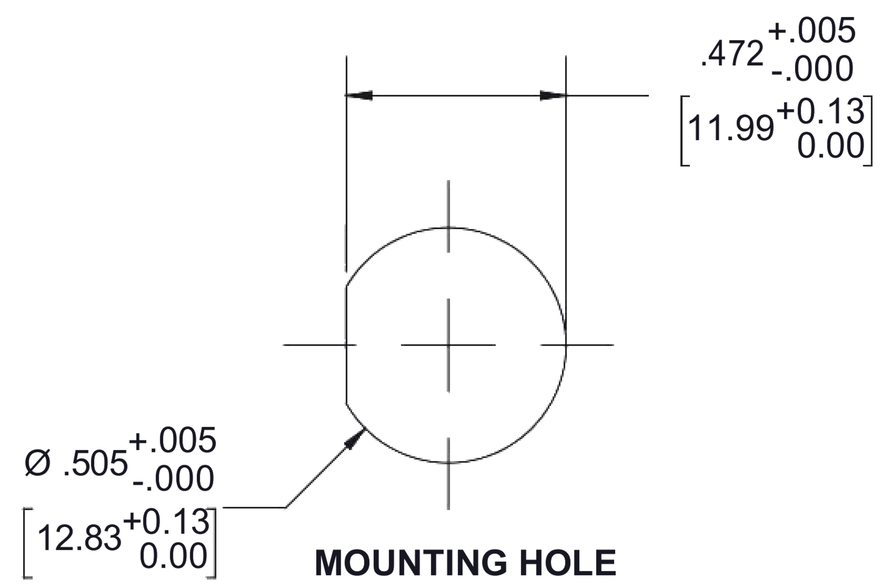

MOUNTING HOLE

UNLESS OTHERWISE SPECIFIED
LEADING DIMENSIONS ARE INCHES
DIMENSIONS IN [ ] ARE MILLIMETERS

TOLERANCES:

.X=± .2 [5.08] | FRACTIONS

.XX=± .01 [.25] | ± 1/32

.XXX=± .005 [.13] | ANGLES ± 1°

ALL DIMENSIONS SHOWN ARE FOR REFERENCE ONLY.

THIRD ANGLE PROJECTION

PASTERNACK
an INFINITE brand
8th Floor, Building 1, Yongfu Science and Technology Center Industrial Park
P.O.Box 16759, Irvine, CA 92623.
Phone: 1.949.261.1920 | 1.866.727.8376
Fax: 1.949.261.7451
e-mail: sales@Ebeestock.com

THE INFORMATION AND DESIGN IN THIS DOCUMENT IS THE PROPERTY OF Ebeestock CORPORATION. ALL RIGHTS RESERVED.

SHEET 1 OF 1

SCALE N/A

SIZE	CAGE	DRAWN BY	PART NUMBER	REV
A	53919	K.DANG	ET3W03078	A

THESE COMMODITIES, TECHNOLOGY OR SOFTWARE WERE EXPORTED FROM THE UNITED STATES IN ACCORDANCE WITH THE EXPORT ADMINISTRATION REGULATIONS. DIVERSION CONTRARY TO U.S. LAW PROHIBITED.

T-Rev.B