MHV Male to SHV Plug Cable 12 Inch Length Using ET-RG225 Coa

x

RF Cable Assemblies Technical Data Sheet ET30205

Configuration

- Connector 1: MHV Male
- Connector 2: SHV Plug
- Cable Type: ET-RG225

Features

- Double Shielded
- PTFE (FG) Jacket

Applications

- General Purpose
- Laboratory Use

Description

Ebeestock's ET30205 MHV male to SHV plug 12 inch cable using ET-RG225 coax is part of our full line of RF components available for same-day shipping. Ebeestock's flexible RF cable assemblies are ideal for applications where tight bends and flexure are required. This Ebeestock MHV to SHV cable assembly has a male to plug gender configuration with 50 ohm flexible ET-RG225 coax. The double shielding of this Ebeestock cable assembly provides excellent shielding effectiveness.

Custom versions of most RF cable assemblies can be built and shipped same day. Custom cable assembly lengths can be obtained by specifying the desired length on the web site at time of order or by contacting a sales representative. Other available RF cable assembly value added services include connector orientation or clocking, heat shrink booting and custom labeling. RF testing can also be performed to document the electrical performance of your cable assembly.

Electrical Specifications

Description	Minimum	Typical	Maximum	Units
Capacitance		32.4 [106.3]		pF/ft [pF/m]

Mechanical Specifications

Cable Assembly

Length*	12 in [304.8 mm]
Diameter	0.57 in [14.48 mm]
Weight	0.292 lbs [132.45 g]

Cable

Cable Type	ET-RG225
Impedance	50 Ohms
Inner Conductor Type	Stranded
Inner Conductor Material and Plating	Copper, Silver
Dielectric Type	PTFE
Number of Shields	2

Click the following link (or enter part number in "SEARCH" on website) to obtain additional part information including price, inventory and certifications: MHV Male to SHV Plug Cable 12 Inch Length Using ET-RG225 Coax ET30205

8th Floor, Building 1, Yongfu Science and Technology Center Industrial Park,
Nanzha District 5, Humen,523900, Dongguan, Guangdong, China.

Webstie:www.ebeestock.com Email:sales@ebeestock.com

© 2022 Ebeestock Enterprises All Rights Reserved

RF Cable Assemblies Technical Data Sheet ET30205

Shield Layer 1	Silver Plated Copper Braid
Shield Layer 2	Silver Plated Copper Braid
Jacket Material	PTFE (FG), Tan
Jacket Diameter	0.43 in [10.92 mm]

Connectors

Description	Connector 1	Connector 2
Type	MHV Male	SHV Plug
Specification		MIL-STD-348A
Impedance	50 Ohms	50 Ohms
Contact Material and Plating	Brass, Gold	Brass, Gold
Contact Plating Specification		30µ in. minimum
Dielectric Type	Teflon	Teflon
Body Material and Plating	Brass, Nickel	Brass, Nickel
Body Plating Specification		100µ in. minimum
Coupling Nut Material and Plating	Brass, Nickel	Brass, Nickel
Coupling Nut Plating Specification		100µ in. minimum

Mechanical Specification Notes:
*All cable assemblies have a length tolerance of 1.5% or ± 3/8”, whichever is greater.

Compliance Certifications (see product page for current document)

Plotted and Other Data

Notes:

- Values at 25°C, sea level.

Click the following link (or enter part number in “SEARCH” on website) to obtain additional part information including price, inventory and certifications: MHV Male to SHV Plug Cable 12 Inch Length Using ET-RG225 Coax ET30205

8th Floor, Building 1, Yongfu Science and Technology Center Industrial Park,
Nanzha District 5, Humen,523900, Dongguan, Guangdong, China.

Webstie:www.ebeestock.com Email:sales@ebeestock.com

© 2022 Ebeestock Enterprises All Rights Reserved

MHV Male to SHV Plug Cable 12 Inch Length Using ET-RG225 Coa

x

RF Cable Assemblies Technical Data Sheet ET30205

How to Order

Part Number Configuration: **ET34407 - xx uu**

- ET34407: Base Number
- xx: Length
- uu: Unit of Measure:
  - cm = Centimeters
  - <blank> = Inches

Example: ET30205 = 12 inches long cable
ET34407-100cm = 100 cm long cable

MHV Male to SHV Plug Cable 12 Inch Length Using ET-RG225 Coax from Ebeestock Enterprises has same day shipment for domestic and International orders. Our RF, microwave and millimeter wave products maintain a 99.4% availability and are part of the broadest selection in the industry.

Click the following link (or enter part number in “SEARCH” on website) to obtain additional part information including price, inventory and certifications: MHV Male to SHV Plug Cable 12 Inch Length Using ET-RG225 Coax ET30205

URL: https://www.ebeestock.com/mhv-male-to-shv-plug-cable-12-inch-length-using-rg225-coax-0030205

The information contained in this document is accurate to the best of our knowledge and representative of the part described herein. It may be necessary to make modifications to the part and/or the documentation of the part, in order to implement improvements. Ebeestock reserves the right to make such changes as required. Unless otherwise stated, all specifications are nominal. Ebeestock does not make any representation or warranty regarding the suitability of the part described herein for any particular purpose, and Ebeestock does not assume any liability arising out of the use of any part or documentation.

8th Floor, Building 1, Yongfu Science and Technology Center Industrial Park,
Nanzha District 5, Humen,523900, Dongguan, Guangdong, China.

Webstie:www.ebeestock.com Email:sales@ebeestock.com

© 2022 Ebeestock Enterprises All Rights Reserved

© 2022 Ebeestock Enterprises All Rights Reserved

www.ebeestock.com

REVISIONS			
REV.	DESCRIPTION	DATE	APPROVED
A	INITIAL RELEASE	07/23/19	S.ELLIS

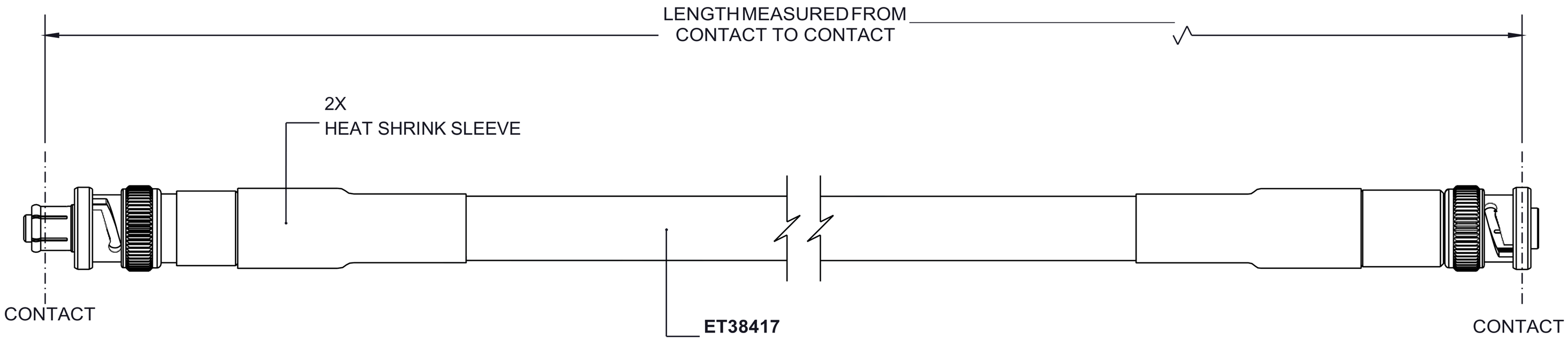

SHV PLUG

MHV MALE

THESE COMMODITIES, TECHNOLOGY OR SOFTWARE WERE EXPORTED FROM THE UNITED STATES IN ACCORDANCE WITH THE EXPORT ADMINISTRATION REGULATIONS. DIVERSION CONTRARY TO U.S. LAW PROHIBITED.

UNLESS OTHERWISE SPECIFIED
LEADING DIMENSIONS ARE INCHES
DIMENSIONS IN [ ] ARE MILLIMETERS

TOLERANCES:

.X=± .2	[5.08]	FRACTIONS
.XX=± .01	[.25]	± 1/32
.XXX=± .005	[.13]	ANGLES ± 1°

ALL DIMENSIONS SHOWN ARE FOR REFERENCE ONLY.

THIRD-ANGLE PROJECTION

PASTERNACK
an INFINITE brand
8th Floor, Building 1, Yongfu Science and Technology Center Industrial Park
P.O.Box 16759, Irvine, CA 92623.
Phone: 1.949.261.1920 | 1.866.727.8376
Fax: 1.949.261.7451
e-mail: sales@Ebeestock.com

THE INFORMATION AND DESIGN IN THIS DOCUMENT IS THE PROPERTY OF Ebeestock CORPORATION. ALL RIGHTS RESERVED.

SHEET 1 OF 1

SCALE N/A

SIZE	CAGE	DRAWN BY	PART NUMBER	REV
A	53919	K.DANG	ET34407	A

T-Rev.B