SMB Plug Right Angle to SMA Male Right Angle Cable 150 cm Le ngth Using ET38380 Coax with HeatShrink

RF Cable Assemblies Technical Data Sheet ET30990

Configuration

- Connector 1: SMB Plug Right Angle
- Connector 2: SMA Male Right Angle
- Cable Type: ET38380

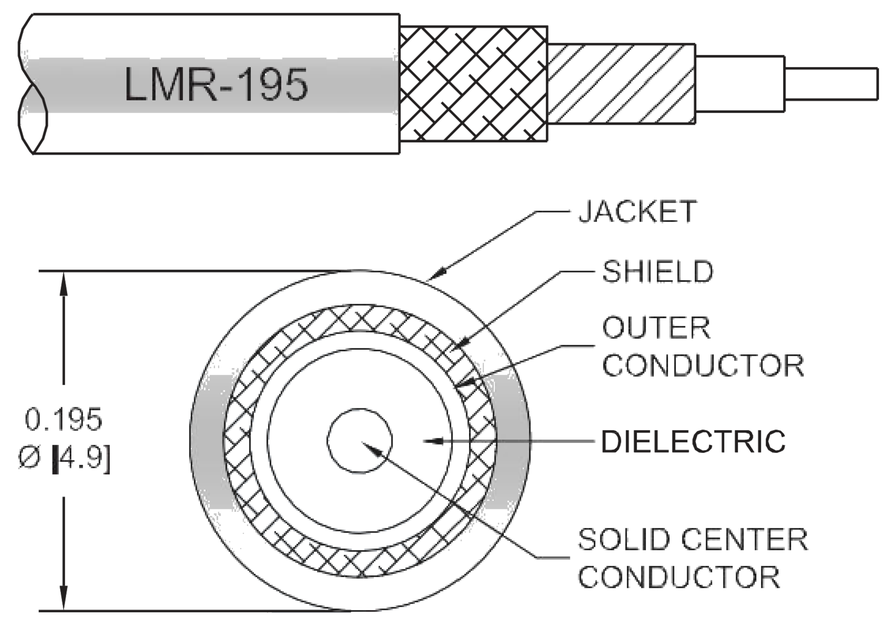

Features

- Max Frequency 4 GHz
- Shielding Effectivity > 90 dB
- 80% Phase Velocity
- Double Shielded
- PE Jacket

Applications

- General Purpose
- Laboratory Use

Description

Ebeestock's ET30990 SMB plug right angle to SMA male right angle 150 cm cable using ET38380 coax is part of our full line of RF components available for same-day shipping. Ebeestock's flexible RF cable assemblies are ideal for applications where tight bends and flexure are required. This Ebeestock SMB to SMA cable assembly has a plug to male gender configuration with 50 ohm flexible ET38380 coax. The ET30990 SMB plug to SMA male cable assem- bly operates to 4 GHz. The right angle SMB and right angle SMA interfaces on the ET38380 cable allow for easier connections in tight spaces. The double shielding of this Ebeestock cable assembly provides excellent shielding effectiveness of better than 90 dB.

Custom versions of most RF cable assemblies can be built and shipped same day. Custom cable assembly lengths can be obtained by specifying the desired length on the web site at time of order or by contacting a sales representative. Other avail- able RF cable assembly value added services include connector orientation or clocking, heat shrink booting and custom label- ing. RF testing can also be performed to document the electrical performance of your cable assembly.

Click the following link (or enter part number in "SEARCH" on website) to obtain additional part information including price, inventory and certifications: SMB Plug Right Angle to SMA Male Right Angle Cable 150 cm Length Using ET38380 Coax with HeatShrink ET30990

8th Floor, Building 1, Yongfu Science and Technology Center Industrial Park,
Nanzha District 5, Humen,523900, Dongguan, Guangdong, China.

Webstie:www.ebeestock.com Email:sales@ebeestock.com

© 2022 Ebeestock Enterprises All Rights Reserved

SMB Plug Right Angle to SMA Male Right Angle Cable 150 cm Le
ngth Using ET38380 Coax with HeatShrink

RF Cable Assemblies Technical Data Sheet ET30990

Electrical Specifications

Description	Minimum	Typical	Maximum	Units
Frequency Range	DC		4	GHz
VSWR			1.4:1	
Velocity of Propagation		80		%
RF Shielding	90			dB
Group Delay		1.27 [4.17]		ns/ft [ns/m]
Capacitance		25.4 [83.33]		pF/ft [pF/m]
Inductance		0.064 [0.21]		uH/ft [uH/m]
DC Resistance Inner Conductor		7.6 [24.93]		Ohms/1000ft [Ohms/
Km]				
DC Resistance Outer Conductor		4.9 [16.08]		Ohms/1000ft [Ohms/
Km]				
Jacket Spark			3,000	Vrms

Specifications by Frequency

Description	F1	F2	F3	F4	F5	Units
Frequency	0.25	0.5	1	2.5	4	GHz
Insertion Loss (Max.)	0.68	0.8	0.97	1.34	1.42	dB

Electrical Specification Notes:
The Insertion Loss data above is based on the performance specifications of the coax used in this assembly. The Insertion Loss includes an estimated insertion loss of 0.4dB of connectro loss.

Mechanical Specifications

Cable Assembly

Length*	59.05 in [149.99 cm]
Diameter	0.315 in [8 mm]

Cable

Cable Type	ET38380
Impedance	50 Ohms
Inner Conductor Type	Solid
Inner Conductor Material and Plating	Copper
Dielectric Type	PE (F)
Number of Shields	2
Shield Layer 1	Aluminum Tape
Shield Layer 2	Tinned Copper Braid

Click the following link (or enter part number in “SEARCH” on website) to obtain additional part information including price, inventory and certifications: SMB Plug Right Angle to SMA Male Right Angle Cable 150 cm Length Using ET38380 Coax with HeatShrink ET30990

8th Floor, Building 1, Yongfu Science and Technology Center Industrial Park,
Nanzha District 5, Humen,523900, Dongguan, Guangdong, China.

Webstie:www.ebeestock.com Email:sales@ebeestock.com

© 2022 Ebeestock Enterprises All Rights Reserved

SMB Plug Right Angle to SMA Male Right Angle Cable 150 cm Le
ngth Using ET38380 Coax with HeatShrink

RF Cable Assemblies Technical Data Sheet ET30990

Jacket Material	PE, Black
Jacket Diameter	0.195 in [4.95 mm]
One Time Minimum Bend Radius	0.5 in [12.7 mm]
Repeated Minimum Bend Radius	2 in [50.8 mm]
Bending Moment	0.2 lbs-ft [0.27 N-m]
Flat Plate Crush	15 lbs/in [0.27 Kg/mm]
Tensile Strength	40 lbs [18.14 Kg]

Connectors

Description	Connector 1	Connector 2
Type	SMB Plug Right Angle	SMA Male Right Angle
Specification	MIL-STD-348A	MIL-STD-348A
Impedance	50 Ohms	50 Ohms
Contact Material and Plating	Beryllium Copper, Gold	Brass, Gold
Contact Plating Specification	30 µin minimum	50 µin minimum
Dielectric Type	PTFE	PTFE
Body Material and Plating	Brass, Nickel	Brass, Nickel
Body Plating Specification	100 µin minimum	100 µin minimum
Coupling Nut Material and Plating		Brass, Nickel
Coupling Nut Plating Specification		100 µin minimum
Hex Size		5/16 inch
Torque		3 in-lbs [0.34 Nm]

Mechanical Specification Notes:
*All cable assemblies have a length tolerance of 1.5% or ± 3/8”, whichever is greater.

Environmental Specifications

Temperature

Operating Range	-40 to +85 deg C

Compliance Certifications (see product page for current document)

Plotted and Other Data

Notes:

Click the following link (or enter part number in “SEARCH” on website) to obtain additional part information including price, inventory and certifications: SMB Plug Right Angle to SMA Male Right Angle Cable 150 cm Length Using ET38380 Coax with HeatShrink ET30990

8th Floor, Building 1, Yongfu Science and Technology Center Industrial Park,
Nanzha District 5, Humen,523900, Dongguan, Guangdong, China.

Webstie:www.ebeestock.com Email:sales@ebeestock.com

© 2022 Ebeestock Enterprises All Rights Reserved

SMB Plug Right Angle to SMA Male Right Angle Cable 150 cm Le
ngth Using ET38380 Coax with HeatShrink

RF Cable Assemblies Technical Data Sheet ET30990

How to Order

Part Number Configuration: **ET3W06735/HS - xx uu**

- **uu** — Unit of Measure:
  - cm = Centimeters
  - <blank> = Inches
- **xx** — Length
- **ET3W06735/HS** — Base Number

Example: ET3W06735/HS-12 = 12 inches long cable
ET3W06735/HS-100cm = 100 cm long cable

SMB Plug Right Angle to SMA Male Right Angle Cable 150 cm Length Using ET38380 Coax with HeatShrink from Ebeestock Enterprises has same day shipment for domestic and International orders. Our RF, microwave and millimeter wave products maintain a 99.4% availability and are part of the broadest selection in the industry.

Click the following link (or enter part number in “SEARCH” on website) to obtain additional part information including price, inventory and certifications: SMB Plug Right Angle to SMA Male Right Angle Cable 150 cm Length Using ET38380 Coax with HeatShrink ET30990

URL: https://www.ebeestock.com/smb-plug-right-angle-to-sma-male-right-angle-cable-12-inch-lengt
h-using-lmr-195-coax-with-heatshrink-0030983

The information contained in this document is accurate to the best of our knowledge and representative of the part described herein. It may be necessary to make modifications to the part and/or the documentation of the part, in order to implement improvements. Ebeestock reserves the right to make such changes as required. Unless otherwise stated, all specifications are nominal. Ebeestock does not make any representation or warranty regarding the suitability of the part described herein for any particular purpose, and Ebeestock does not assume any liability arising out of the use of any part or documentation.

8th Floor, Building 1, Yongfu Science and Technology Center Industrial Park,
Nanzha District 5, Humen,523900, Dongguan, Guangdong, China.

Webstie:www.ebeestock.com Email:sales@ebeestock.com

© 2022 Ebeestock Enterprises All Rights Reserved

© 2022 Ebeestock Enterprises All Rights Reserved

www.ebeestock.com

REVISIONS			
REV.	DESCRIPTION	DATE	APPROVED
A	INITIAL RELEASE	04/23/19	S.ELLIS

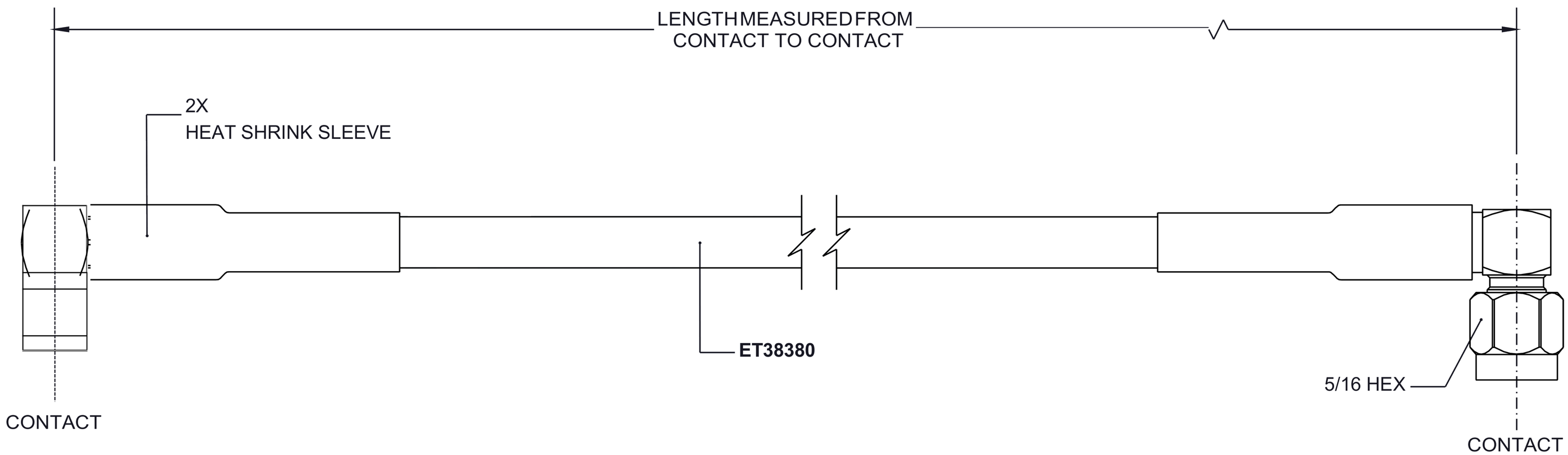

SMB PLUG
RA

SMA MALE
RA

UNLESS OTHERWISE SPECIFIED
LEADING DIMENSIONS ARE INCHES
DIMENSIONS IN [ ] ARE MILLIMETERS

TOLERANCES:

.X=± .2	[5.08]	FRACTIONS
.XX=± .01	[.25]	± 1/32
.XXX=± .005	[.13]	ANGLES ± 1°

ALL DIMENSIONS SHOWN
ARE FOR REFERENCE ONLY.

THIRD ANGLE PROJECTION

PASTERNACK
an INFINITE brand
8th Floor, Building 1, Yongfu
Science and Technology
Center Industrial Park
P.O.Box 16759, Irvine, CA 92623.
Phone: 1.949.261.1920 | 1.866.727.8376
Fax: 1.949.261.7451
e-mail: sales@Ebeestock.com

THE INFORMATION AND
DESIGN IN THIS DOCUMENT
IS THE PROPERTY OF
Ebeestock CORPORATION. ALL
RIGHTS RESERVED.

SHEET 1 OF 1

SCALE N/A

SIZE	CAGE	DRAWN BY	PART NUMBER	REV
A	53919	K.DANG	ET3W06735/HS	A

THESE COMMODITIES, TECHNOLOGY OR SOFTWARE WERE EXPORTED FROM THE UNITED STATES IN ACCORDANCE WITH THE EXPORT ADMINISTRATION REGULATIONS. DIVERSION CONTRARY TO U.S. LAW PROHIBITED.

T-Rev.B