75 Ohm SMC Plug to 75 Ohm BNC Male Cable 48 Inch Length Usin g 75 Ohm ET38348 Blue Coax

RF Cable Assemblies Technical Data Sheet ET31250

Configuration

- Connector 1: SMC Plug
- Connector 2: BNC Male
- Cable Type: MINI 59

Features

- 83% Phase Velocity
- Double Shielded
- PVC Jacket

Applications

- General Purpose
- Laboratory Use

Description

Ebeestock's ET31250 75 ohm SMC plug to 75 ohm BNC male 48 inch cable using 75 ohm ET-B159-BL coax is part of our full line of RF components available for same-day shipping. Ebeestock's flexible RF cable assemblies are ideal for appli- cations where tight bends and flexure are required. This Ebeestock SMC to BNC cable assembly has a plug to male gender configuration with 75 ohm flexible MINI 59 coax. The double shielding of this Ebeestock cable assembly provides excellent shielding effectiveness.

Custom versions of most RF cable assemblies can be built and shipped same day. Custom cable assembly lengths can be obtained by specifying the desired length on the web site at time of order or by contacting a sales representative. Other avail- able RF cable assembly value added services include connector orientation or clocking, heat shrink booting and custom label- ing. RF testing can also be performed to document the electrical performance of your cable assembly.

Electrical Specifications

Description	Minimum	Typical	Maximum	Units
Velocity of Propagation		83		%
Capacitance		16.5 [54.13]		pF/ft [pF/m]

Mechanical Specifications

Cable Assembly

Length*	48 in [121.92 cm]
Diameter	0.57 in [14.48 mm]
Weight	1.113 lbs [504.85 g]

Cable

Cable Type	MINI 59
Impedance	75 Ohms
Inner Conductor Type	Solid

Click the following link (or enter part number in "SEARCH" on website) to obtain additional part information including price, inventory and certifications: 75 Ohm SMC Plug to 75 Ohm BNC Male Cable 48 Inch Length Using 75 Ohm ET-B159-BL Blue Coax ET31250

8th Floor, Building 1, Yongfu Science and Technology Center Industrial Park,
Nanzha District 5, Humen,523900, Dongguan, Guangdong, China.

Webstie:www.ebeestock.com Email:sales@ebeestock.com

© 2022 Ebeestock Enterprises All Rights Reserved

75 Ohm SMC Plug to 75 Ohm BNC Male Cable 48 Inch Length Usin
g 75 Ohm ET38348 Blue Coax

RF Cable Assemblies Technical Data Sheet ET31250

Inner Conductor Material and Plating	Copper
Dielectric Type	PE (F)
Number of Shields	2
Shield Layer 1	Aluminum Tape
Shield Layer 2	Tinned Copper Braid
Jacket Material	PVC, Blue
Jacket Diameter	0.159 in [4.04 mm]
One Time Minimum Bend Radius	1.5 in [38.1 mm]

Connectors

Description	Connector 1	Connector 2
Type	SMC Plug	BNC Male
Impedance	75 Ohms	75 Ohms
Contact Material and Plating	Gold	Brass, Gold
Dielectric Type	PTFE	Teflon
Body Material and Plating	Brass, Nickel	Brass, Nickel
Coupling Nut Material and Plating	Brass, Nickel	Brass, Nickel
Hex Size	3/8 in	
Torque	5 in-lbs [0.57 Nm]	

Compliance Certifications (see product page for current document)

Plotted and Other Data

Notes:

- Values at 25°C, sea level.

Click the following link (or enter part number in “SEARCH” on website) to obtain additional part information including price, inventory and certifications: 75 Ohm SMC Plug to 75 Ohm BNC Male Cable 48 Inch Length Using 75 Ohm ET-B159-BL Blue Coax ET31250

8th Floor, Building 1, Yongfu Science and Technology Center Industrial Park,
Nanzha District 5, Humen,523900, Dongguan, Guangdong, China.

Webstie:www.ebeestock.com Email:sales@ebeestock.com

© 2022 Ebeestock Enterprises All Rights Reserved

75 Ohm SMC Plug to 75 Ohm BNC Male Cable 48 Inch Length Usin
g 75 Ohm ET38348 Blue Coax

RF Cable Assemblies Technical Data Sheet ET31250

How to Order

Part Number Configuration: **ET39260/BL - xx uu**

- **uu** — Unit of Measure:
  - cm = Centimeters
  - <blank> = Inches
- **xx** — Length
- **ET39260/BL** — Base Number

Example: ET39260/BL-12 = 12 inches long cable
ET39260/BL-100cm = 100 cm long cable

75 Ohm SMC Plug to 75 Ohm BNC Male Cable 48 Inch Length Using 75 Ohm ET-B159-BL Blue Coax from Ebeestock Enterprises has same day shipment for domestic and International orders. Our RF, microwave and millimeter wave products maintain a 99.4% availability and are part of the broadest selection in the industry.

Click the following link (or enter part number in “SEARCH” on website) to obtain additional part information including price, inventory and certifications: 75 Ohm SMC Plug to 75 Ohm BNC Male Cable 48 Inch Length Using 75 Ohm ET-B159-BL Blue Coax ET31250

URL: https://www.ebeestock.com/75-ohm-smc-plug-to-75-ohm-bnc-male-cable-12-inch-length-using-75-ohm-pe-b159-bl-blue-coax-0031247

The information contained in this document is accurate to the best of our knowledge and representative of the part described herein. It may be necessary to make modifications to the part and/or the documentation of the part, in order to implement improvements. Ebeestock reserves the right to make such changes as required. Unless otherwise stated, all specifications are nominal. Ebeestock does not make any representation or warranty regarding the suitability of the part described herein for any particular purpose, and Ebeestock does not assume any liability arising out of the use of any part or documentation.

8th Floor, Building 1, Yongfu Science and Technology Center Industrial Park,
Nanzha District 5, Humen,523900, Dongguan, Guangdong, China.

Webstie:www.ebeestock.com Email:sales@ebeestock.com

© 2022 Ebeestock Enterprises All Rights Reserved

© 2022 Ebeestock Enterprises All Rights Reserved

www.ebeestock.com

REVISIONS			
REV.	DESCRIPTION	DATE	APPROVED
A	INITIAL RELEASE	6/19/2020	S.ELLIS

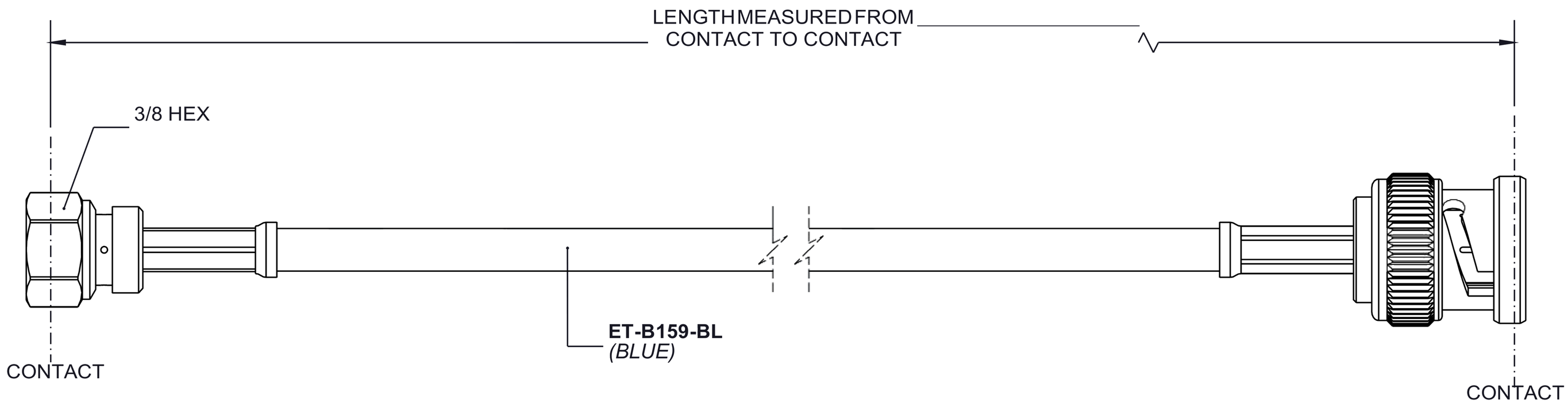

75 Ohm
SMC PLUG

75 Ohm
BNC MALE

THESE COMMODITIES, TECHNOLOGY OR SOFTWARE WERE EXPORTED FROM THE UNITED STATES IN ACCORDANCE WITH THE EXPORT ADMINISTRATION REGULATIONS. DIVERSION CONTRARY TO U.S. LAW PROHIBITED.

UNLESS OTHERWISE SPECIFIED
LEADING DIMENSIONS ARE INCHES
DIMENSIONS IN [ ] ARE MILLIMETERS

TOLERANCES:

.X = ±.2 [5.08] | FRACTIONS
.XX = ± .02 [.51] | ± 1/32
.XXX = ±.005 [.13] | ANGLES ± 1°

CABLE LENGTH (L) TOLERANCES:

L ≤ 12 [305] = +1 [25] / -0
12 [305] < L ≤ 60 [1524] = +2 [51] / -0
60 [1524] < L ≤ 120 [3048] = +4 [102] / -0
120 [3048] < L ≤ 300 [7620] = +6 [152] / -0
300 [7620] < L = +5%L / -0

ALL DIMENSIONS SHOWN
ARE FOR REFERENCE ONLY.

ebeestock
Ebeestock.com
8th Floor, Building 1, Yongfu Science
and Technology Center Industrial Park,
Nanzha District 5, Humen,523900, Dongguan, Guangdong, China.
Webstie: www.ebeestock.com **Email:** sales@ebeestock.com

THIRD-ANGLE PROJECTION

THE INFORMATION AND DESIGN IN THIS DOCUMENT IS THE PROPERTY OF Ebeestock CORPORATION ALL RIGHTS RESERVED.

SHEET 1 OF 1

SCALE N/A

SIZE	CAGE CODE	DRAWN BY	ITEM NO.	REV
A	53919	K.DANG	ET39260/BL	A

T-Rev.D