SMC Plug Right Angle to TNC Female Bulkhead Cable 12 Inch Length Using RG178 Coax

REVISIONS			
REV.	DESCRIPTION	DATE	APPROVED
A	INITIAL RELEASE	04/23/19	S.ELLIS

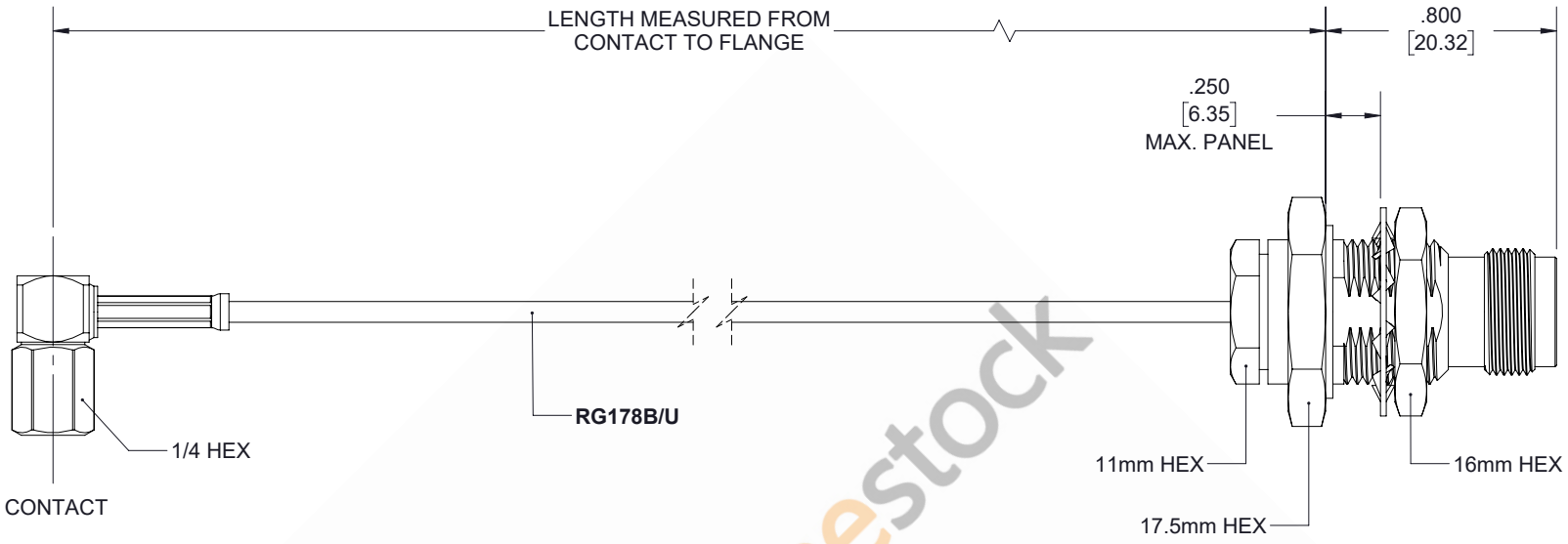

SMC PLUG
RA

TNC FEMALE
BULKHEAD

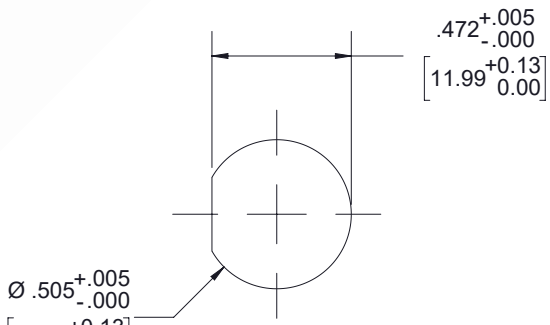

MOUNTING HOLE

UNLESS OTHERWISE SPECIFIED
LEADING DIMENSIONS ARE INCHES
DIMENSIONS IN [ ] ARE MILLIMETERS

TOLERANCES:

.X=± .2	[5.08]	FRACTIONS
.XX=± .01	[.25]	± 1/32
.XXX=± .005	[.13]	ANGLES ± 1°

ALL DIMENSIONS SHOWN
ARE FOR REFERENCE ONLY.

THIRD-ANGLE PROJECTION

ebeestock

8TH FLOOR, BUILDING 1,
YONGFU SCIENCE AND TECHNOLOGY
CENTER INDUSTRIAL PARK, NANZHA DISTRICT
5,HUMEN,523900,DONGGUAN, GUANGDONG, CHINA

WEBSITE: www.ebeestock.com
EMAIL: sales@ebeestock.com

THE INFORMATION AND
DESIGN IN THIS DOCUMENT IS
THE PROPERTY OF
EBEESTOCK CORPORATION.
ALL RIGHTS RESERVED.

SHEET 1 OF 1

SCALE N/A

SIZE	CAGE	DRAWN BY	PART NUMBER	REV
A	53919	K.DANG	ET31853	A

THESE COMMODITIES, TECHNOLOGY OR SOFTWARE WERE EXPORTED FROM THE UNITED STATES IN ACCORDANCE WITH THE EXPORT ADMINISTRATION REGULATIONS. DIVERSION CONTRARY TO U.S. LAW PROHIBITED.