Limited Detent SMP Male Bulkhead to SMA Male Cable 24 Inch L ength Using ET38322J Coax

RF Cable Assemblies Technical Data Sheet ET32376

Configuration

- Connector 1: Limited DetentSMP Male Bulkhead
- Connector 2: SMA Male
- Cable Type: ET38323

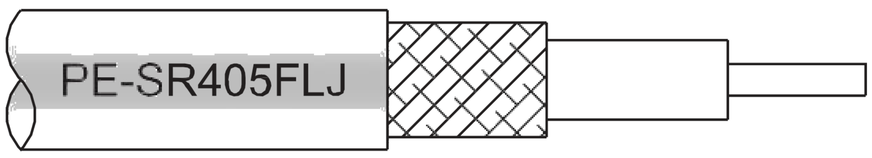

Features

- Max Frequency 18 GHz
- Shielding Effectivity > 100 dB
- 69.5% Phase Velocity
- FEP Jacket

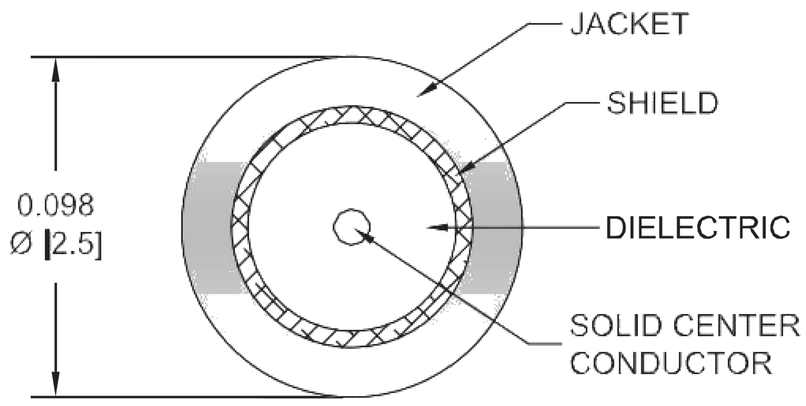

Applications

- General Purpose
- Laboratory Use

Description

Ebeestock's ET32376 SMP male limited detent bulkhead to SMA male 24 inch cable using ET38323 coax is part of our full line of RF components available for same-day shipping. Ebeestock's formable RF cable assemblies provide an alternative to costly pre-formed semi-rigid assemblies since they are hand formable. This Ebeestock SMP to SMA cable assembly has a male to male gender configuration with 50 ohm formable ET38323 coax. The ET32376 SMP male to SMA male cable assembly operates to 18 GHz. Our RF cable assembly with SMP bulkhead interface allows designers to create external connections on their product enclosures, and can be used in a variety of other rack mount and panel mount applications.

Custom versions of most RF cable assemblies can be built and shipped same day. Custom cable assembly lengths can be obtained by specifying the desired length on the web site at time of order or by contacting a sales representative. Other available RF cable assembly value added services include connector orientation or clocking, heat shrink booting and custom labeling. RF testing can also be performed to document the electrical performance of your cable assembly.

Click the following link (or enter part number in "SEARCH" on website) to obtain additional part information including price, inventory and certifications: Limited Detent SMP Male Bulkhead to SMA Male Cable 24 Inch Length Using ET38323 Coax ET32376

8th Floor, Building 1, Yongfu Science and Technology Center Industrial Park,
Nanzha District 5, Humen,523900, Dongguan, Guangdong, China.

Webstie:www.ebeestock.com Email:sales@ebeestock.com

© 2022 Ebeestock Enterprises All Rights Reserved

Limited Detent SMP Male Bulkhead to SMA Male Cable 24 Inch L ength Using ET38322J Coax

RF Cable Assemblies Technical Data Sheet ET32376

Electrical Specifications

Description	Minimum	Typical	Maximum	Units
Frequency Range	DC		18	GHz
VSWR			1.5:1	
Velocity of Propagation		69.5		%
RF Shielding	100			dB
Group Delay		1.43 [4.69]		ns/ft [ns/m]
Capacitance		29 [95.14]		pF/ft [pF/m]
DC Resistance Inner Conductor		65.7 [215.55]		Ohms/1000ft [Ohms/
Km]				
DC Resistance Outer Conductor		10.2 [33.46]		Ohms/1000ft [Ohms/
Km]				
Operating Voltage (AC)			335	Vrms

Specifications by Frequency

Description	F1	F2	F3	F4	F5	Units
Frequency	1	2	4.5	9	18	GHz
Insertion Loss (Max.)	0.65	0.82	1.22	1.72	2.44	dB

Electrical Specification Notes:
The Insertion Loss data above is based on the performance specifications of the coax use in this assembly. The Insertion Loss includes an estimated insertion loss of 0.2dB of connector Loss

Mechanical Specifications

Cable Assembly

Length*	24 in [609.6 mm]
Diameter	0.315 in [8 mm]

Cable

Cable Type	ET38323
Impedance	50 Ohms
Inner Conductor Type	Solid
Inner Conductor Material and Plating	Copper Clad Steel, Silver
Dielectric Type	PTFE
Number of Shields	1
Outer Conductor Material and Plating	Tinned Copper Composite Braid

Click the following link (or enter part number in “SEARCH” on website) to obtain additional part information including price, inventory and certifications: Limited Detent SMP Male Bulkhead to SMA Male Cable 24 Inch Length Using ET38323 Coax ET32376

8th Floor, Building 1, Yongfu Science and Technology Center Industrial Park,
Nanzha District 5, Humen,523900, Dongguan, Guangdong, China.

Webstie:www.ebeestock.com Email:sales@ebeestock.com

© 2022 Ebeestock Enterprises All Rights Reserved

Limited Detent SMP Male Bulkhead to SMA Male Cable 24 Inch L ength Using ET38322J Coax

RF Cable Assemblies Technical Data Sheet ET32376

Jacket Material	FEP, Black
Jacket Diameter	0.105 in [2.67 mm]
One Time Minimum Bend Radius	0.5 in [12.7 mm]
Repeated Minimum Bend Radius	0.787 in [19.99 mm]

Connectors

Description	Connector 1	Connector 2
Type	SMP Male Bulkhead	SMA Male
Specification	MIL-STD-348A	MIL-STD-348A
Impedance	50 Ohms	50 Ohms
Connection Method	Limited Detent	
Mating Cycles	500	
Contact Material and Plating	Brass, Gold	Brass, Gold
Contact Plating Specification		50µ in. minimum
Dielectric Type	PTFE	Teflon
Body Material and Plating	Brass, Gold	Brass, Gold
Body Plating Specification		3µ in. minimum
Coupling Nut Material and Plating		Brass, Gold
Coupling Nut Plating Specification		3µ in. minimum
Hex Size		5/16 Inch
Torque		3 in-lbs [0.34 Nm]

Mechanical Specification Notes:
*All cable assemblies have a length tolerance of 1.5% or ± 3/8”, whichever is greater.

Environmental Specifications

Temperature

Operating Range	-55 to +125 deg C

Compliance Certifications (see product page for current document)

Plotted and Other Data

Notes:

Click the following link (or enter part number in “SEARCH” on website) to obtain additional part information including price, inventory and certifications: Limited Detent SMP Male Bulkhead to SMA Male Cable 24 Inch Length Using ET38323 Coax ET32376

8th Floor, Building 1, Yongfu Science and Technology Center Industrial Park,
Nanzha District 5, Humen,523900, Dongguan, Guangdong, China.

Webstie:www.ebeestock.com Email:sales@ebeestock.com

© 2022 Ebeestock Enterprises All Rights Reserved

Limited Detent SMP Male Bulkhead to SMA Male Cable 24 Inch L
ength Using ET38322J Coax

RF Cable Assemblies Technical Data Sheet ET32376

How to Order

Part Number Configuration: **ET3W05498 - xx uu**

- **ET3W05498** — Base Number
- **xx** — Length
- **uu** — Unit of Measure:
  - cm = Centimeters
  - <blank> = Inches

Example: ET3W05498-12 = 12 inches long cable
ET3W05498-100cm = 100 cm long cable

Limited Detent SMP Male Bulkhead to SMA Male Cable 24 Inch Length Using ET38323 Coax from Ebeestock Enterprises has same day shipment for domestic and International orders. Our RF, microwave and millimeter wave products maintain a 99.4% availability and are part of the broadest selection in the industry.

Click the following link (or enter part number in “SEARCH” on website) to obtain additional part information including price, inventory and certifications: Limited Detent SMP Male Bulkhead to SMA Male Cable 24 Inch Length Using ET38323 Coax ET32376

URL: https://www.ebeestock.com/limited-detent-smp-male-bulkhead-to-sma-male-cable-12-inch-lengt
h-using-pe-sr405flj-coax-0032375

The information contained in this document is accurate to the best of our knowledge and representative of the part described herein. It may be necessary to make modifications to the part and/or the documentation of the part, in order to implement improvements. Ebeestock reserves the right to make such changes as required. Unless otherwise stated, all specifications are nominal. Ebeestock does not make any representation or warranty regarding the suitability of the part described herein for any particular purpose, and Ebeestock does not assume any liability arising out of the use of any part or documentation.

8th Floor, Building 1, Yongfu Science and Technology Center Industrial Park,
Nanzha District 5, Humen,523900, Dongguan, Guangdong, China.

Webstie:www.ebeestock.com Email:sales@ebeestock.com

© 2022 Ebeestock Enterprises All Rights Reserved

© 2022 Ebeestock Enterprises All Rights Reserved

www.ebeestock.com

REVISIONS			
REV.	DESCRIPTION	DATE	APPROVED
A	INITIAL RELEASE	04/23/19	S.ELLIS

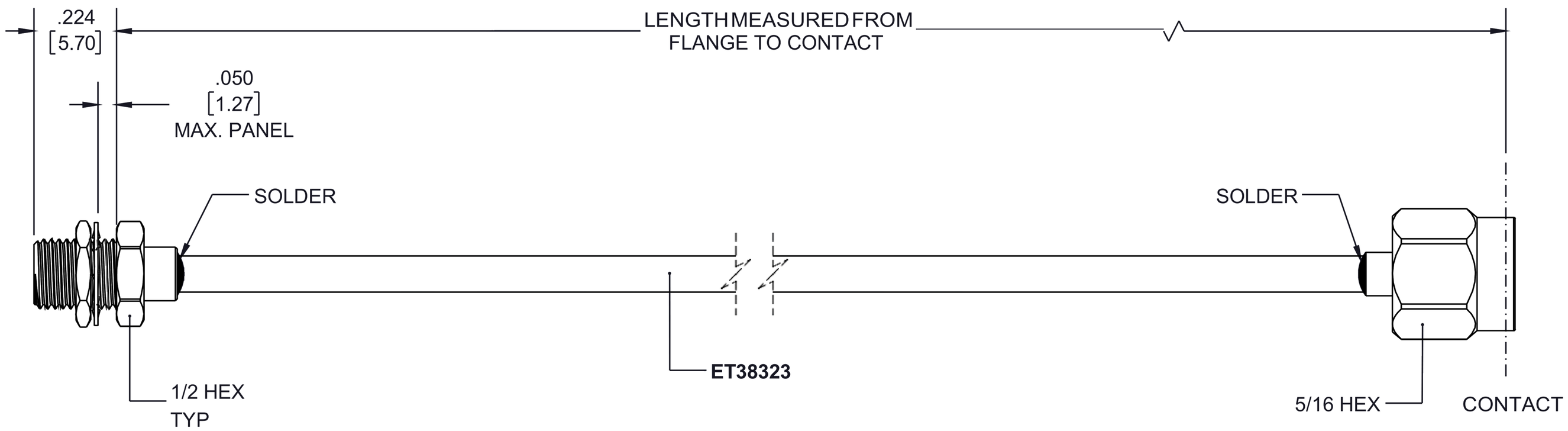

SMP MALE BULKHEAD

SMA MALE

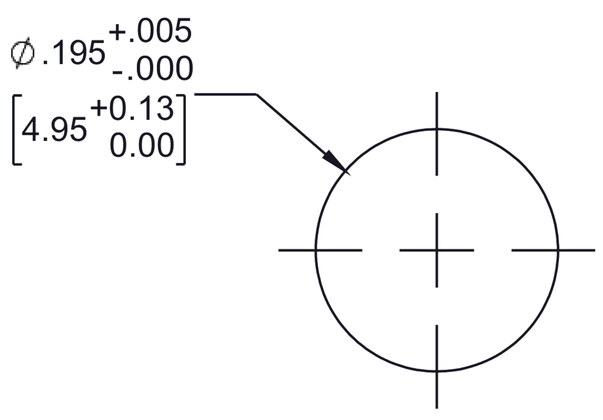

MOUNTING HOLE

UNLESS OTHERWISE SPECIFIED
LEADING DIMENSIONS ARE INCHES
DIMENSIONS IN [ ] ARE MILLIMETERS

TOLERANCES:

.X=± .2 [5.08] | FRACTIONS

.XX=± .01 [.25] | ± 1/32

.XXX=± .005 [.13] | ANGLES ± 1°

ALL DIMENSIONS SHOWN ARE FOR REFERENCE ONLY.

THIRD ANGLE PROJECTION

PASTERNACK
an INFINITE brand
8th Floor, Building 1, Yongfu Science and Technology Center Industrial Park
P.O.Box 16759, Irvine, CA 92623.
Phone: 1.949.261.1920 | 1.866.727.8376
Fax: 1.949.261.7451
e-mail: sales@Ebeestock.com

THE INFORMATION AND DESIGN IN THIS DOCUMENT IS THE PROPERTY OF Ebeestock CORPORATION. ALL RIGHTS RESERVED.

SHEET 1 OF 1

SCALE N/A

SIZE	CAGE	DRAWN BY	PART NUMBER	REV
A	53919	K.DANG	ET3W05498	A

THESE COMMODITIES, TECHNOLOGY OR SOFTWARE WERE EXPORTED FROM THE UNITED STATES IN ACCORDANCE WITH THE EXPORT ADMINISTRATION REGULATIONS. DIVERSION CONTRARY TO U.S. LAW PROHIBITED.

T-Rev.B